The 2012 World Congress on
Advances in Civil, Environmental, and Materials Research (ACEM' 12)
Seoul, Korea, August 26-30, 2012

A New Simulator to Recreate Extreme Dynamic Loads on Large-Scale Building Component and Cladding Systems

*S. Y. Shen[1)], F.J. Masters[2)] and H. Upjohn II[3)]

[1),2)]*Dept. of Civil and Coastal Engineering, Univ. of Florida, Gainesville, FL, U.S.A*
[3)]*Special-Lite, Inc. Decatur, MI, U.S.A*

[1)]*seraphy@ufl.edu*

ABSTRACT

A new large-scale hurricane simulator is under construction in the Powell Family Structures and Materials Laboratory at the University of Florida. This facility is designed as a method to replicate naturally occurring wind and pressure in a controlled laboratory environment. The simulator was designed to reproduce Saffir-Simpson Hurricane Scale Category 5 wind loads on full-scale building components and cladding systems with a maximum plan area of 40 m^2. The simulator was designed to recreate an entire hurricane passage (>12 hours) at up to a 22 kPa pressure. The facility should be able to test specimens that exhibit large air leakage (< 47 m^3/s) and deflections (< 1 m) under replicated wind loads. The paper provides an update on the development of the facility, which will be operational in summer 2012. Details about the final configuration, validation and initial experiments will be discussed during the conference session.

Keywords: large-scale; hurricane simulator; pressure loading actuator

1. INTRODUCTION

Hurricanes cause approximately $10 billion in damage in the continental United States annually (Pielke 2008), and the damage continues increasing with the growing

[1)] Assistant Professor
[2)] Graduate Student
[3)] Chief Executive Officer

population and properties in the coastal areas which are highly vulnerable to hurricanes. Wind-induced losses are primarily attributed to damage of buildings. For example, in August of 1992, Hurricane Andrew struck the northwestern Bahamas, southern Florida and southwest Louisiana and caused approximately $45 billion in damage, and 70% of the damage was caused as a result of the breach of the building envelope on low-rise buildings (O'Brien 1995). During hurricane Andrew, more than 25,000 homes were destroyed and more than 100,000 others were damaged in southern Dade County, Florida (Ed Rappaport 1993). Therefore, improving wind-resistance of low-rise buildings can significantly mitigate hurricane-induced losses.

Historically, wind-resistant design focused on the main wind load-resisting frame system (O'Brien 1995). However, hundreds of post-storm investigations have found that building envelope system is a significant contributor to damage (e.g., Minor 2005), particularly for infrastructure constructed under older building codes. Damage to the building envelope (e.g. the loss of panels of roof sheathing, the breakage of window glasses) can result in water ingress, sudden increases in internal pressure that overpressure the roof system, among other cascading factors that lead to severe damage.

This paper addresses recent efforts to develop large-scale testing apparatuses those are capable of recreating time-varying wind speed/load conditions at “full-scale,” i.e. simulating storm conditions at sufficient scale to evaluate the performance of full-size building systems. The authors have developed a dual-mode system capable of replicating both time-varying wind speed and pressure. This facility is scheduled to be commissioned in summer 2012.

2. EXISTING FULL-SCALE WIND FLOW/LOAD TESTING FACILITIES

This project was inspired by multiple wind engineering efforts directed at recreating stochastic wind loads on building systems. The first notable project was the BRE Real-time Wind Uniform Load Follower (BRERWULF), which was developed by the Building Research Establishment (BRE) in the United Kingdom to investigate the performance of multi-layer cladding systems subjected to temporally fluctuating wind loads. The system utilized a closed-loop control system that varied pressure in a test chamber to follow a prescribed stochastic pressure sequence (Cook 1988). In the 2000s, the University of Western Ontario started the “Three Little Pigs” (3LP) project to develop the next generation BRERWULF system (Kopp 2010), which is called the Pressure Loading Actuator (PLA). Each PLA is able to recreate temporally fluctuating wind pressure, and spatial variations of wind pressure can be realized by using many PLAs simultaneously. The control valve system of this facility was designed to generate a linear relationship between produced pressure and valve position.

More recently, Florida International University (FIU) and the Insurance Institute for Business & Home Safety (IBHS) have developed full-scale boundary layer wind field simulators. Since 2003, FIU has been developing the Wall of Wind (WoW) in multiple stages (Chowdhury 2009). The FIU WoW facility has gone through from 2-fan, 6-fan to currently 12-fan phases, and the 12-fan WoW system is designed to produce sustained wind velocity in excess of 65 m/s to test full-scale structures. This facility, which is still in development, will use passive devices and active control mechanism to generate the desired wind flow characteristics (Bitsuamlak 2009). The Windstorm Test Facility developed in the IBHS Research Center is actually a full-scale wind tunnel. This facility has a large fan system comprised of 105 1.68 m (6 foot) diameter variable speed fans, and is capable of generating up to Category 3 hurricane wind conditions (Liu 2009). The test chamber of the full-scale wind tunnel has a large dimension of 44 m long × 44 m wide × 21 m high, enabling the facility to test one- or two-story structures with a cross-section area up to 220 m^2. The proportional-integral-derivative technique employed in the control system is able to produce an approximately linear relationship between flow velocities and fan RPM.

3. THE LARGE-SCALE DYNAMIC WIND LOAD SIMULATOR AT THE UNIVERSITY OF FLORIDA

In 2009, the authors began development of a new large-scale dynamic wind load simulator (henceforth Simulator) to recreate extreme wind and wind loads to test large/full-scale building components and cladding systems. Goals of the project are to:

1) Recreate time-varying wind and wind loads representing Category 5 Hurricane winds in a controllable laboratory environment;
2) Investigate hurricane-induced behaviors of building systems, and thus contribute for future retrofitting, optimization, design, building code modification, etc.;
3) Validate and enhance the numerical simulation of structures, which is cost- and time-efficient.

The Simulator has four main components: a fan system, ducting, a control system and a test chamber (Fig. 1). A centrifugal fan, driven by a Caterpillar 3512 DITA diesel prime mover, produces the required pressure and air flow rate. The fan is able to generate pressures in the range of $\pm$ 23 kPa (90 in. wg), and a flow rate of 47 m^3/s. The ducts connecting the fan and the air-box are made of 9.5 mm (3/8 in) thick steel. The circular parts of the ducting have an internal diameter of 1524 mm (60 in). In addition, two VAW duct silencers are incorporated in the inlet and outlet of the ducting system respectively to isolate the possibly resultant noise from the operation of the Simulator. The control system is comprised of four butterfly dampers and one opposed blade damper, which work together to recreate target wind pressure/velocity traces.

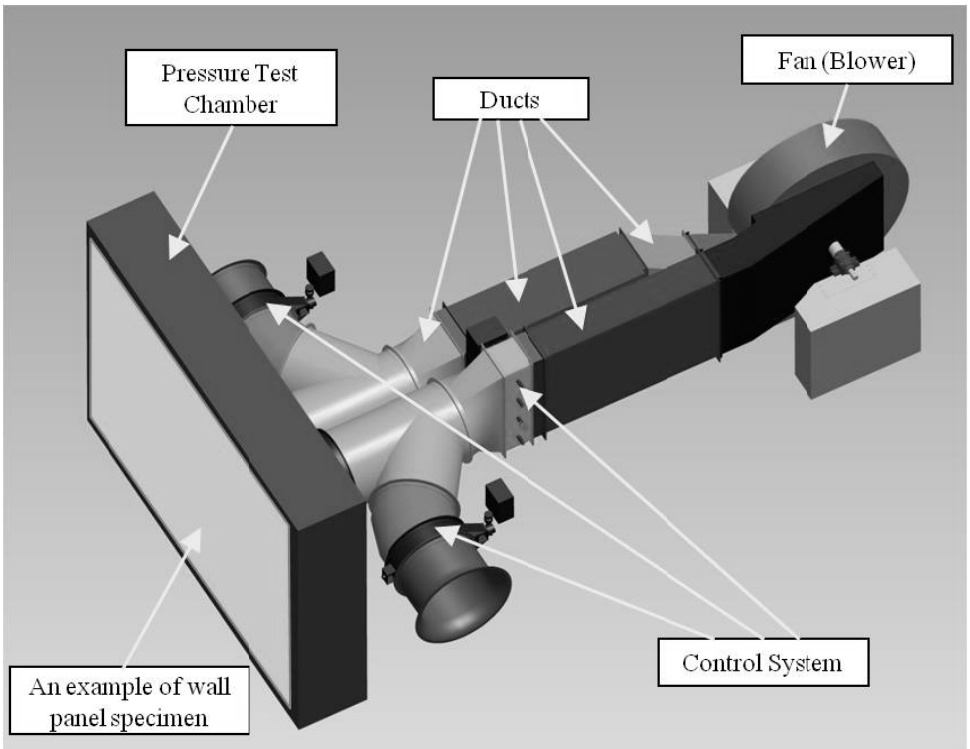

Figure 1. Three-dimensional drawing of the Simulator with the major components

The pressure test chamber is comprised of a test chamber made of reinforced concrete and a reaction frame made of steel. It has dimensions of 7.3 m wide × 5.5 m high × 0.9 m deep (24 ft × 18 ft × 3 ft), and the reaction frame made of HSS16 × 12 × 3/8 is connected to the air-box through the post-tensioning bars. The simulator enables full-scale building systems to be tested under replicated hurricane wind and wind pressure in a controllable laboratory environment. By adding wind-driven rain devices, the effects of rain to structures can be investigated as well. This full-scale facility can be a potential method to replace or reduce the need for simple diagnostic tools, such as building product approval tests adapted from ASTM procedures.

4. CONTROL SYSTEM

The control system of the Simulator is comprised of five dampers: four butterfly dampers and a custom-built fast-acting opposed blade damper located upstream of the

fan (Fig. 2). The butterfly dampers function to change the principal direction of loading (i.e. positive pressure or suction), and the mode of operation (i.e. pressure or wind velocity simulation). The blade louver damper serves to change the system air resistance and thus change the operating point of the fan performance curve (a curve showing the relationship between static pressure and the air flow rate of the fan) to achieve the desired pressure or wind velocity in the test chambers. Butterfly dampers 1 and 2 are the exterior intake and exhaust dampers, and butterfly dampers 3 and 4 are to convey airflow into and out of the test chamber for pressure simulation. The blade louver damper is activated by a hydraulic servo cylinder implementing the analog proportional-integral-derivative (PID) technique. In addition, pressure inside the test chamber can be measured and monitored by a custom analog computer which can send feedback to the servo driving the hydraulic cylinder and thus adjust the damper position. The process can be assumed to occur instantaneously because only analog feedback/control is employed (i.e. no A/D or D/A occurs), and this allows the Simulator to capture high-frequency fluctuations of wind pressure and flow.

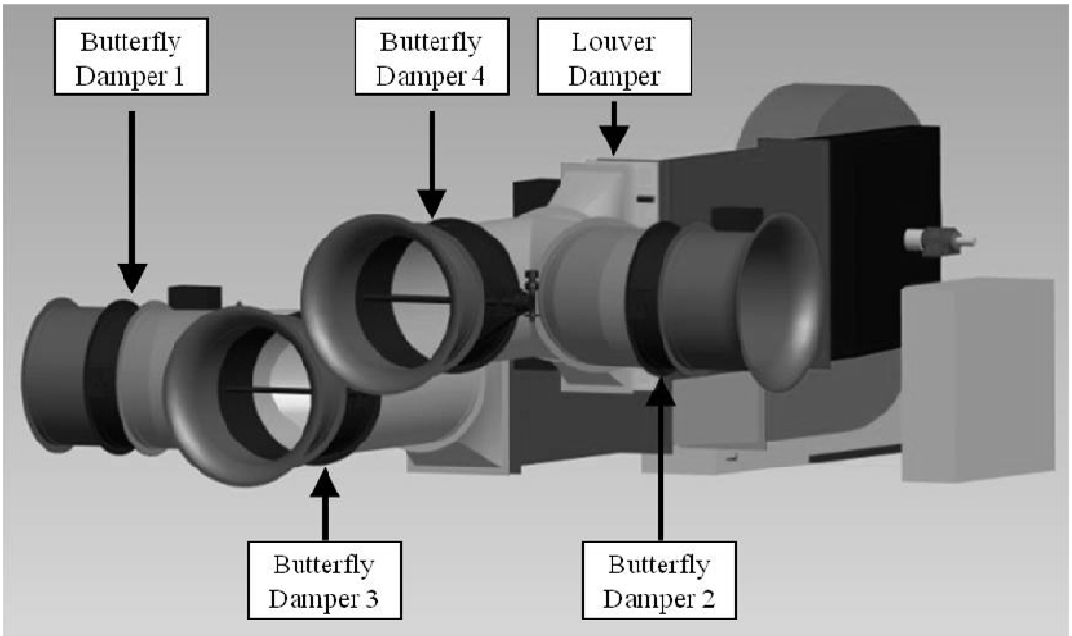

Figure 2. Damper Configuration

5. OPERATING MODES

5.1. Pressure simulation

Test specimens are mounted into the reaction frame at the mouth of the pressure chamber. Opening butterfly dampers 3 and 4 allows air flow to enter into and run out of the chamber and thus change the internal pressure. As mentioned above, the rate of air supply is regulated by the blade louver damper. Closing the louver damper will increase the resistance of the system and thus results in the fan to produce higher static pressure and less airflow, and vice versa. Therefore, changing the inclined angle of the blades changes the pressure applied on test specimens. With the incorporation of the feedback signal from measuring the pressure inside the test chamber, a desired pressure trace is able to be achieved by adjusting the position of the louver damper.

Pressure data will be acquired from wind tunnel modeling records. This research focuses on low-rise buildings, which are common for commercial, residential and industrial use (St. Pierre 2005). The US National Institute of Standard and Technology (NIST) has created an aerodynamic database of wind-induced pressure time histories on the envelope of various low-rise buildings (Chen 2003), and was chosen in this research for the pressure simulation. For example, a pressure time history with 10 Hz frequency and -14 kPa peak pressure shown in Fig. 3 can be possibly replicated by the Simulator. The pressure sequence was extracted from wind tunnel data measured at University of Western Ontario (UWO)

The fan and control system enable the Simulator to produce a maximum pressure of $\pm$ 23 kPa and a maximum pressure change of 10 Hz. Additionally, the fan is capable of testing building components and cladding systems with high flow leakage up to 47 m^3/s, and the size of the air-box allows the specimen to deflect up to 1 m during pressure simulation.

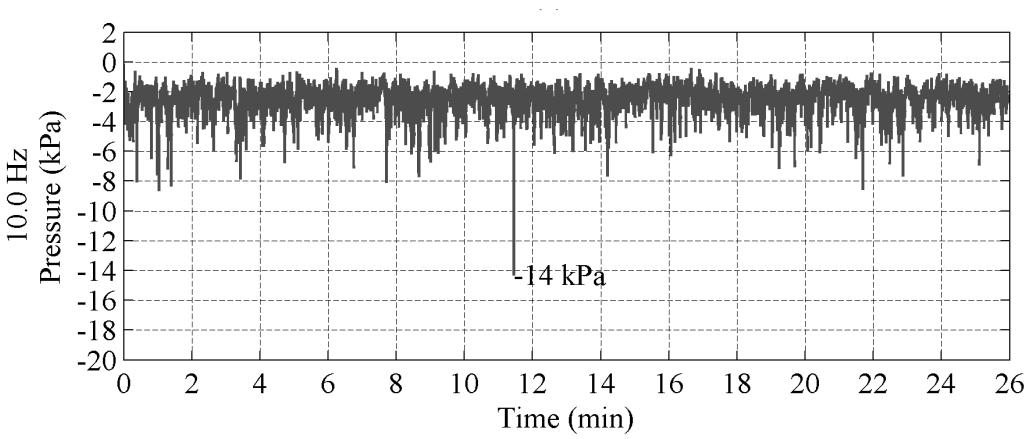

Figure 3. An example of pressure time history from wind-tunnel data measured at the University of Western Ontario

5.2. Velocity simulation

Closing butterfly dampers 3 and 4 allows airflow to pass directly from the exterior intake to the exterior exhaust. The exterior exhaust is connected to a jet ducting system (Fig. 4) for velocity simulation. A contraction element in the ducting allows specimens (e.g. roofs, tiles, shingles and etc.) to be tested under wind flow of high speeds and fast fluctuations. The test chamber is relatively small compared to other facilities of this kind (e.g. FIU WoW and IBHS Windsorm Test Facility), and this feature allows the velocity simulation to focus on the components of a building which are more vulnerable to hurricane wind flow, such as the roof plane. The airflow can be regulated with the same algorithm used for modulating the wind pressure simulation. A control loop feedback mechanism monitors the pressure or flow inside the chambers and hence adjusts the operating point of the fan to achieve desired pressure or velocity. The analog feedback/control technique allows the control system and corresponding change in pressure or velocity to respond rapidly.

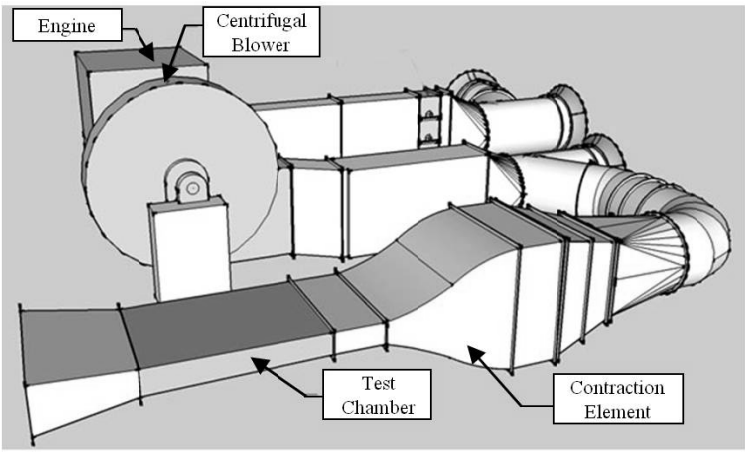

Figure 4. Dynamic Flow Simulator

6. CURRENT STATUS

The Simulator is currently being constructed in the Powell Family Structures and Materials Laboratory at the University of Florida. At this time, the fan system has been located in place outside of the laboratory (Fig. 5a); the ducting components including the two VAW silencers have been connected together with the fan system (Fig. 5a); the control dampers have been incorporated with the ducting (Fig. 5b) and inserted in the front wall of the test chamber (Fig. 5c); the reinforced concrete (Fig. 5d) test chamber has been finished construction as well (Fig. 5c). The reaction frame and the electronic control panel for the dampers are still under construction. As mentioned earlier, the

Simulator is scheduled to be operational in summer 2012. Fig. 5a shows the fan system and Fig. 5b shows the butterfly dampers and a portion of steel reinforcing bars of the air-box.

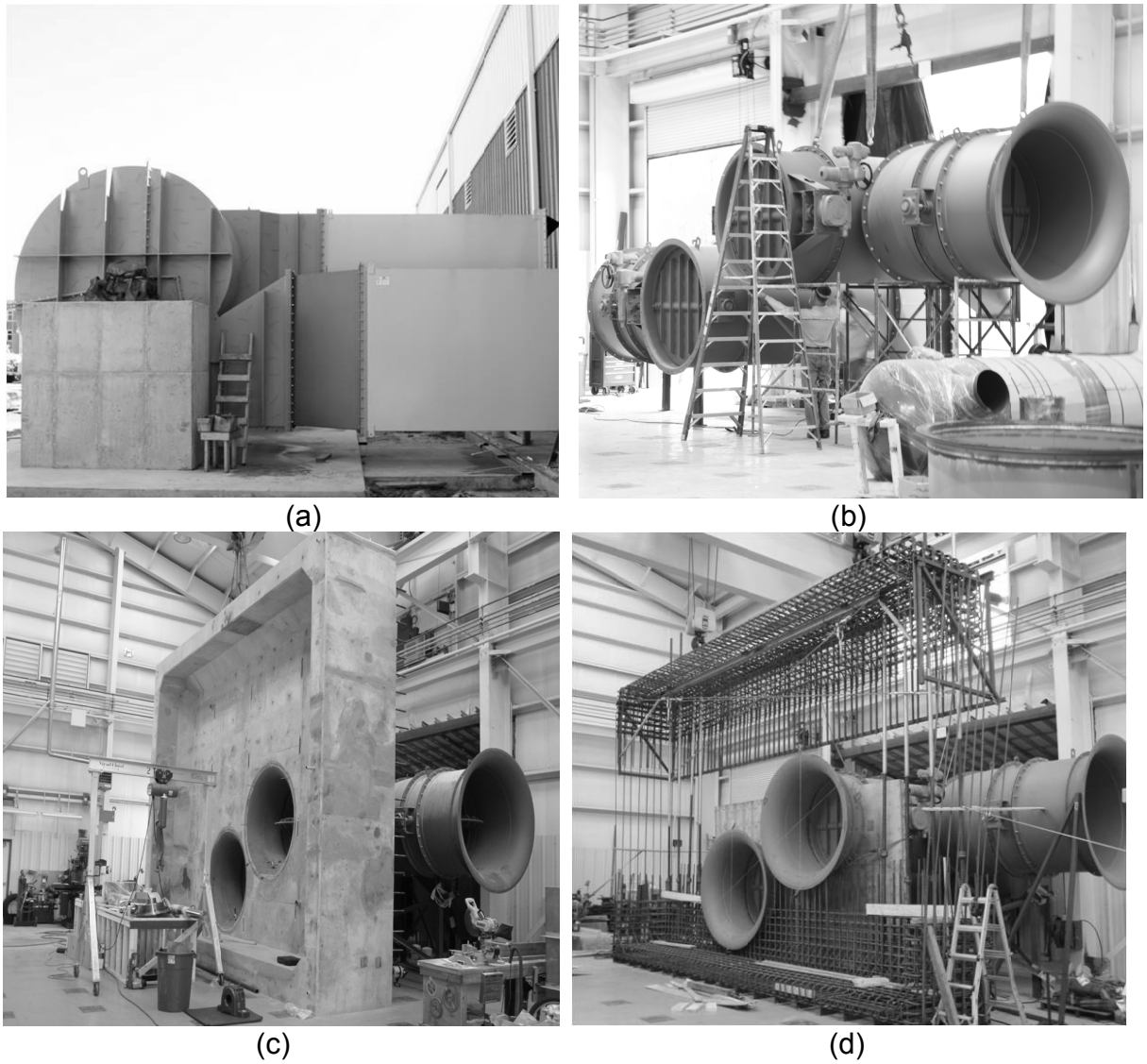

Figure 5. (a) The fan system outside of the Powell Family Structures and Materials Laboratory; (b) the butterfly dampers; (c) the pressure test chamber with two butterfly dampers inserted in the front wall; (d) butterfly dampers and part of steel reinforcing bars for the test chamber

ACKNOWLEDGEMENTS

The authors appreciate Special-Lite Inc. for providing primary financial and technical support. We are also grateful to the Florida Building Commission and the Florida State University Florida Catastrophic Storm Risk Management Center for providing financial support for construction of the equipment. The authors would also like to thank the students and staff at the Powell Family Structures and Materials Laboratory at the University of Florida for the construction of the system.

REFERENCES

Bitsuamlak, G. T., Chowdhury, A. G. and Sambare, D. (2009). “Application of a full-scale testing facility for assessing wind-driven-rain intrusion.” *Building and Environment*, 44(12), 2430-2441.

Chen, Y., Kopp, G. A. and Surry, D. (2003). “Interpolation of pressure time series in an aerodynamic database for low buildings.” *Journal of Wind Engineering and Industrial Aerodynamics*, 91(6), 737-765.

Chowdhury, A. G., Simu, E. and Leatherman, S. P. (2009). “Destructive Testing under Simulated Hurricane Effects to Promote Hazard Mitigation.” *Natural Hazards Review*, 10(1), 1-10.

Cook, N. J., Keevil, A. P. and Stobart, R. K. (1988). “BRERWULF - The Big Bad Wolf.” *Journal of Wind Engineering and Industrial Aerodynamics*, 29, 99-107.

Edward Rappaport, (1993). “Hurricane Andrew Preliminary Report.” *National Hurricane Center*.

Kopp, G. A., Morrison, M. J., Gavanski, E., Henderson, D. J. and Hong, H. P. (2010). “‘Three Little Pigs’ Project: Hurricane Risk Mitigation by Integrated Wind Tunnel and Full-Scale Laboratory Tests.” *Natural Hazards Review*, 11(4), 151-162.

Liu, Z., Smith, J., Masters, F. and Reinhold, T. (2009). “Assessment of Wind Storm Facility at the Insurance Center for Building Safety Research.” *The seventh Asia-Pacific Conference on Wind Engineering*, Taipei, Taiwan, 8 pages.

Minor, J., (2005). “Lessons learned from failures of the building envelope in windstorms.” *Journal of Architectural Engineering*, 11(1), 10-13.

O'Brien, C. C., (1995). “Full-Scale structural testing for severe wind, 1995.” *The INEL Severe Windstorm Testing Workshop*, 48 pages.

Pielke, R., Gratz, J., Landsea, C., Collins, D., Saunders, M. and Musulin, R. (2008). “Normalized Hurricane Damage in the United States:1900-2005.” *Natural Hazard Review*, 9(1), 29-42.

St. Pierre, L. M., Kopp, G. A., Surry, D. and Ho, T. C. E. (2005). “The UWO contribution to the NIST aerodynamic database for wind loads on low buildings: Part 2. Comparison of data with wind load provisions.” *Journal of Wind Engineering and Industrial Aerodynamics*, 93(1), 31-59.