The 2015 World Congress on
Advances in Structural Engineering and Mechanics (ASEM15)
Incheon, Korea, August 25-29, 2015

Improvement of Crashworthiness of Bus Structure under Frontal Impact

*Pattaramon Jongpradist[1)], Supakit Senawat[2)], and Burawich Muangto[3)]

[1), 2)] Department of Mechanical Engineering, Faculty of Engineering, King Mongkut's University of Technology Thonburi, 126 Pracha-utit Rd., Bangmod, Thungkru, Bangkok, Thailand, 10140
[2)] pattaramon.tan@kmutt.ac.th

ABSTRACT

Frontal impact shares the major cause among all bus accidents leading to great injury risk and fatalities of the driver, crew and occupants. Most passive safety standards compulsory for buses are more related to the safety of the passengers and less to the safety of the driver. Regulations and/or guidelines specifically arranged for frontal collision of bus structure are not available. This study aimed to analyze the bus structural strength and assess the deformation characteristics of the bus body under frontal crash based on ECE R29 regulations enforced to truck cabin. A finite element model of bus front structure is developed in Hypermesh and the analysis is performed by using nonlinear explicit dynamic code ABAQUS. For passive safety under frontal collision, the survival space has to be maintained after impact such that there is no contact with the non-resilient parts and the driver manikin. The baseline design was numerically tested and the strength of the bus structure is shown to be unsatisfactory. Improvement of the bus structural crashworthiness is recommended based on two different deformation zones in the front. Thin-walled tubular structure is proposed in the crumple zone to primarily dissipate the collision energy. For self-protection zone, a rigid non-deforming driver compartment is achieved by strengthening the A-pillars with the use of high strength steel and increase in the stiffness of the pillar profiles.

1. INTRODUCTION

Accident statistics from the Traffic Safety Facts 2013 report showed that the numbers of vehicle fatality and injury rates per vehicle miles travelled have been promisingly decreased during the past years (NHTSA's National Center for Statistics and Analysis, 2014). Bus transit is accounted as the safest means of medium and long distance transportation. Nonetheless, the numbers of bus collisions and casualties has

---

[1)] Assistant Professor
[2)] Undergraduate Student
[3)] Undergraduate Student

been increased with the numbers of vehicle. In the United States, there are 55,000 bus-involved crashes each year with an average of 250 occupant fatalities and up to 14,000 injuries. The common types of bus accidents involve frontal collision, side impact, rear impact and rollover accidents. Among others, the major share of thirty-five percent of fatal bus crashes result from a frontal initial point of impact.

Studies on crashworthiness and safety of vehicles have gained attentions in the past years with an emphasis on investigation of passenger car safety (Prochowski et al. 2011, Al-Thairy and Wang 2014). Research on buses and coaches safety is evidently limited. Some regulations compulsory for heavy vehicles are imposed for passenger protection. Federal Motor Vehicle Safety Standards (FMVSS) 220 establishes performance requirements for school bus rollover protection in the United States. In European community, United Nations Economic Commission for Europe (UN-ECE) Regulation-66 concerning with the strength of bus superstructure under dynamic lateral rollover test and ECE R80 specifying the strength of seats and their anchorages are enforced. However, regulations and/or guidelines specifically arranged for frontal collision of bus structure directly concerned with the safety of the driver and crew do not exist. However, the passengers are in much greater risk if the bus driver is not protected during the course of accident. The ECE R29 regulation is imposed to provide the safety of the truck cabin and the driver under frontal crash (Mirzaamiri et al., 2012). Some proposals similar to ECE R29 are under discussions in Working Party on Passive Safety (GRSP) in UN-ECE and a similar regulation for buses will be imposed in the near future (Cerit et al., 2010).

In bus frontal collision, the driver safety is related to two opposite effects: deformation of driver compartment measured by intrusion; and deceleration felt by the driver measured by the amplitude and time duration of the crash pulse (Matsumoto et al., 2012). The use of components capable of buckling in a controlled progressive folding pattern is used as a mean to improve crashworthiness for vehicle occupant protection in passenger cars. Thin-walled steel tubes collapsing under axial crushing can also be as energy absorbers, most commonly exist as either square or circular cross sections (Abramowicz, 2003; Zhang and Zhang, 2012; Nia and Parsapour, 2014). The inefficiency in design causes the frontal longitudinal tubes to collapse in a bending mode rather than progressive axial crushing. Eren et al. (2009) and Ambati et al. (2012) have employed finite element solver ANSYS/LS-DYNA to accurately predict the collapse of different configurations of front side rails of a passenger car. In bus frontal collision, some researchers such as have used Finite Element Analysis (FEA) to evaluate the deformation mechanism and structural responses of vehicle under impact loads based on different concepts. However, suggestions on improvement of crashworthiness for passenger buses are limited.

The primary objectives of the current research are to use explicit dynamic FEA to characterize the structural response and deformation mechanism of bus framework designed and manufactured in Thailand under frontal collision according to ECE-R29 regulation. Critical structures affected by the collision are studied and recommendations for crashworthiness improvement are given based on crash energy dissipation management of categorized deformation zones.

2. FRONTAL CRASH REGULATION ACCORDING TO ECE-R29

According to front impact test in ECE R29, for vehicles with a gross vehicle mass exceeding 7.5 tons, the pendulum impact energy of 55 kJ must be applied. The pendulum has a striking surface of 2500 mm x 800 mm, and is made of steel with evenly distributed mass of at least 1500 kg. The pendulum is suspended by two rigid beams of 1000 mm apart and not less than 3500 mm long from the axis of suspension to the geometric center of the impactor. Its striking surface shall be in contact with the foremost part of the vehicle and the vertical position of the pendulum's center of gravity (H-point) is 50 + 5/-0 mm below the R-point of the driver's seat (Fig. 1). To meet the requirement, there should be no contact between the driver manikin and the non-resilient parts of the bus structure after the impact.

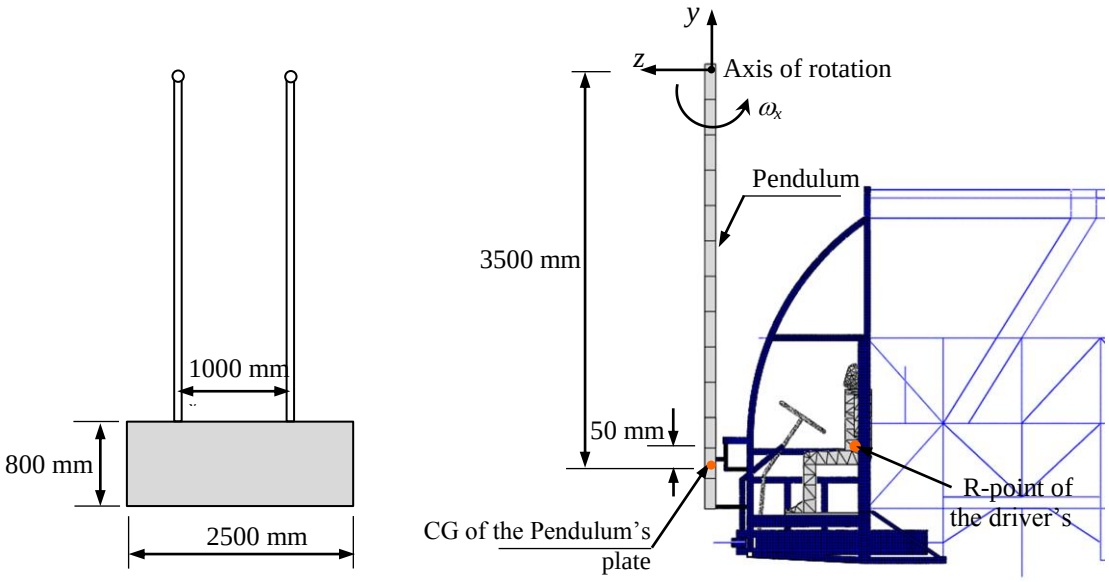

Fig. 1 Frontal impact test according to ECE-R29

The impact angular velocity, ω, can be calculated by the applied impact energy E, as

$$E = ½ I_{xx} \omega^2 \quad (1)$$

where I_{xx} (= $I_{xc} + mL^2$) is the equivalent mass moment of inertia about x-axis at the pendulum pivot, Ixc is the mass moment of inertia about x_c-axis passing through the H-point, m is the pendulum mass and L is the distance between the pivot and the H-point.

3. ANALYSIS OF THE BASELINE STRUCTURE

3.1 Finite element model of bus structure

The frontal crash analysis of the full baseline bus structure is firstly simulated to investigate crashworthiness of the bus according to ECE-R29 and identify the parts of the structure where strengthening or modifications are required to satisfy the regulation. The finite element model comprises three parts: the bus body, the pendulum impactor and the driver dummy.

The baseline bus body is a high-decker bus of 2.52 m width, 14.5 m length and 3.25 m height. The bus frames are made of steel with rectangular cross section of 50x25x2.3 mm and 50x50x2.3 mm. The material density is 7,860 kg/m^3, elastic modulus is 210 GPa and Poisson's ratio is 0.3. The chassis and the front bumper is made of structural steel with yield strength is 370 MPa and ultimate strength is 540 MPa while other parts are made of mild steel and its yield strength and ultimate strength are 330 MPa and 375 MPa, respectively. The total weight of the bus structure is 3.51 tons. The front parts of the bus body are meshed with linear S4R shell elements while the rear parts are modeled with 11,381 beam elements as depicted in Fig. 2. The mesh size is chosen to be 5 to 25 mm where the deformations are large whereas the 60-mm element size is applied farther away from the impact location. The boundary conditions are according to the actual test specified in the regulation.

The pendulum is modeled as a rigid body plate of 2200 kg mass with two suspended beams of 3.5 m length to its center. The pendulum mass moment of inertia is 2453 kg.m^2. To simulate 55-kJ impact energy, the pendulum's angular velocity of 2.306 rad/s is specified at the impact instance. General contact interactions are assigned to the plate impactor and the front parts of the bus structure while self-contact of the bus members are also employed. A rigid driver dummy of 77 kg weight is placed on a chair fixed to a floor beam. At the driving position, the clearances between the steering system and the driver's knee (c_1), the driver's chest (c_2), and the lap (c_3) as depicted in Fig. 3 are 176 mm, 175 mm and 160 mm, respectively.

Nonlinear material and geometry are considered in the analysis. Explicit dynamic analysis is performed by using a finite element code, ABAQUS. The analysis is performed for 0.18 seconds from the instance the pendulum first impacted the bus front until it rebound from the bus.

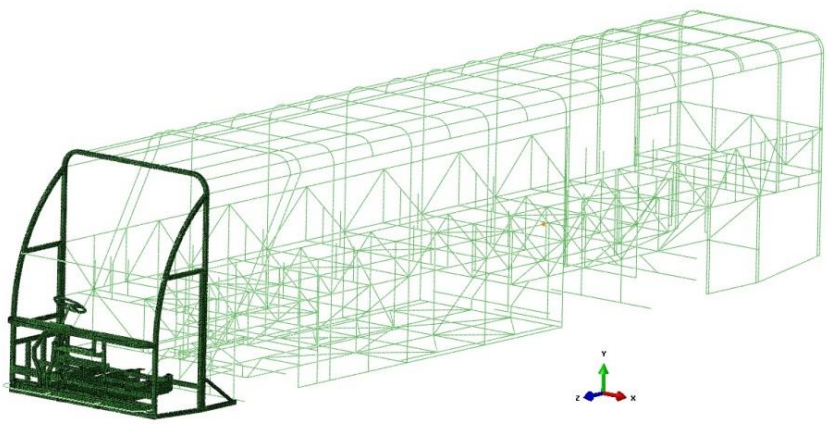

Fig. 2 Bus structure of the baseline design

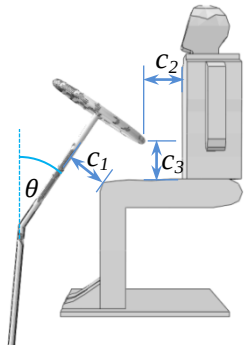

Fig. 3 Clearances between the steering system and the driver

Since the analysis of the full model takes considerable computing resource, a simplified FE model is also considered. In the simplified model, only the front parts of the bus to the B-pillars are included. Parts of bus body that have no significant effect on the final output from frontal impact are removed from the FE model. The locations of roof, side beams and chassis connected to the frontal part are specified as supports. The simplified FE model of bus front weighs 348 kg and consists of 50,799 S4R shell elements and 50,437 nodes.

3.2 Analysis results

Energy plot versus time for the full FE model of the baseline structure during frontal impact test is illustrated in Fig. 4. The accuracy is ensured since the total energy remained constant and the hourglass energy did not exceed 10% of the internal energy.

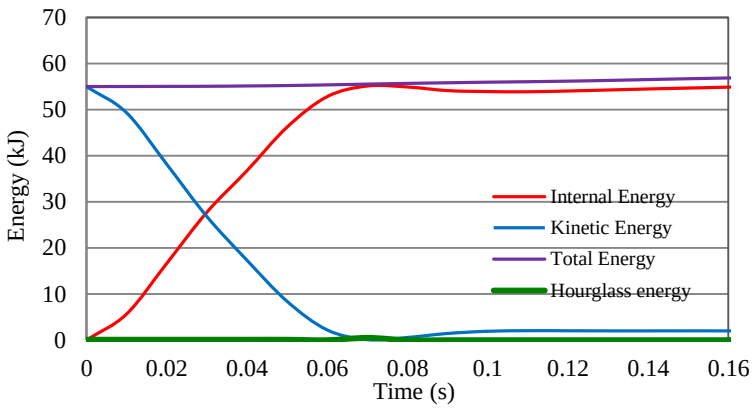

Fig. 4 Energy plot during impact simulation of the full bus model

The deformed shapes of the bus during and after frontal impact test are shown in Fig. 5. It can be obviously seen that the baseline structure does not pass the ECE-R29 regulation. The A-pillars and the front frame underwent fairly large bending deformations and the steering wheel substantially extruded into the manikin body; thus, the requirement for driver's survival space of the baseline model was not satisfied. Global buckling was also observed on the axial members in the direction of crush. Maximum deformation of the bus body occurred at the time instance of 85 ms with the

intrusion of 114 mm and 72 mm into the driver's knees and chest, respectively. The steering system displaces from the original angle θ of 34˚ from the vertical axis to the maximum of 55 and 53 degrees for the full and simplified models. Table 1 shows comparisons for the final deformations of the main structural members obtained by using the full bus model and the bus front model of the baseline structure. The results are comparable and thus the simplified model is justified to be used for further analysis instead of the full bus model. The deformations in z-direction of the main structures from analysis of the simplified baseline model are illustrated in Fig. 6. For the existing design, the bending of frontal frame was observed right after the pendulum impact and large deformation was measured at this point. The axial thin-walled absorbers positioned in front of the frame are comparatively stiff and buckling of the absorber does not occur. Thus, the axial members were not efficiently design for energy absorption during frontal collision and should be re-designed.

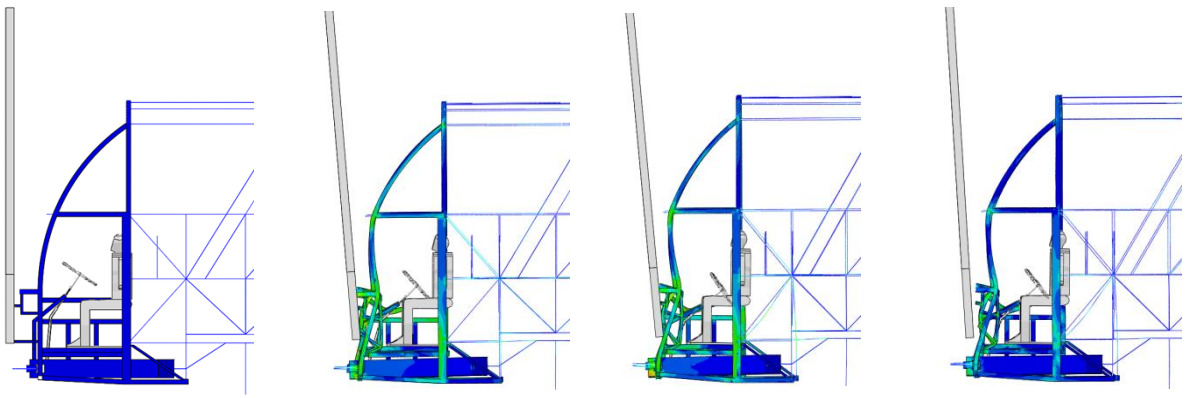

(a) t = 0.000 sec Impact instance | (b) t = 0.050 sec During impact | (c) t = 0.085 sec Max. deformation | (d) t = 0.170 sec After impact

Fig. 5 Progressive deformed shape of the baseline model at different time instance

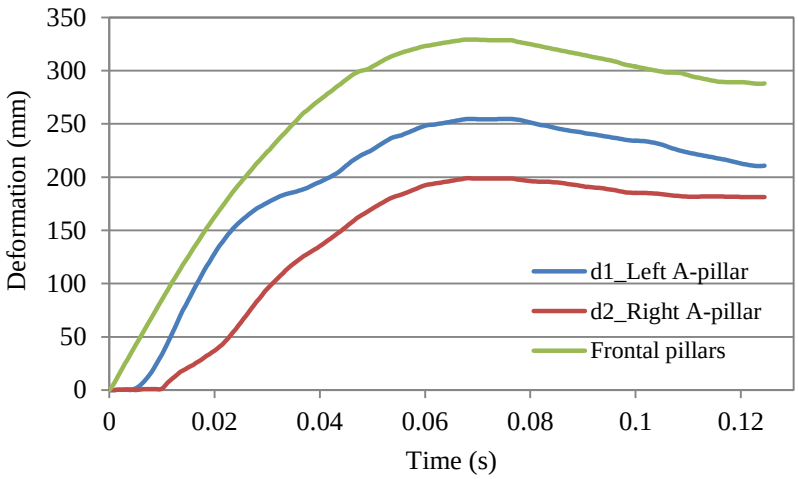

Fig. 6 Deformations in *z*-direction of the main structures during impact test

Table 1 Result comparisons between the full model and the simplified model for baseline design

Model type	Locations of maximum displacement (mm)		
	Left A-pillar (d_1)	Right A-pillar (d_2)	Frontal frame (d_3)
Full bus body	286	223	277
Bus front	255	199	287
Difference (%)	-10.9	-10.5	3.75

4. CRASHWORTHINESS IMPROVEMENT

To pass the frontal impact regulation, crashworthiness of the front structure is redesigned based on two deformation zones similar to those of passenger cars, i.e., crumple zone (shown as yellow parts in Fig. 7) and rigid compartment zone (green parts). The crumple zone is made from thin-walled axial members to primarily dissipate the collision energy while the profiles of the driver compartment zone are designed to possess high bending stiffness to resist the bearing load from the axial profiles.

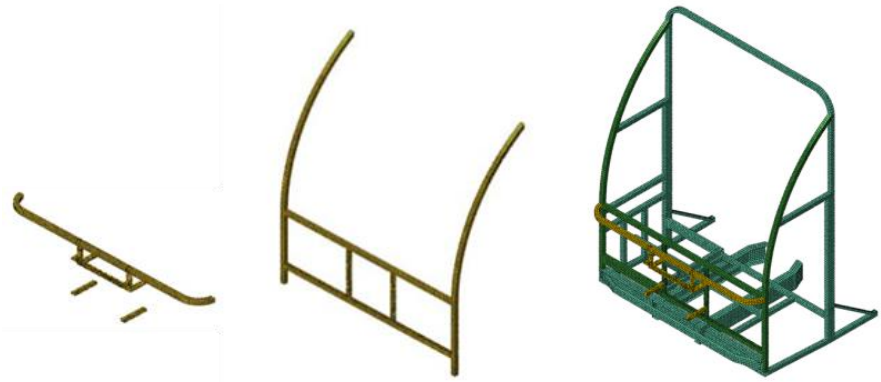

(a) Crumple zone (b) compartment protection zone (c) bus front

Fig. 7 Components in bus front structure

Three designs for structural improvement for compartment and crumple zones as listed in Table 2 are analyzed. The increase in structural mass of the bus front is limited to less than 10%. Model A focuses on improving the stiffness and rigidity of the compartment protection zone by changing the cross-sectional profiles of A-pillars. Model B enhances the crumple structures by adding more axial absorbers and front pillars to the baseline model. Model C changes the material of the crumple structure to stainless steel type 304 with yield strength of 290 MPa and ultimate tensile strength of 620 MPa so as to obtain higher toughness in the crumple structure.

Table 2 Designs of structural improvement for compartment and crumple structure

Model	Weight (kg)	Compartment structure	Crumple structure	
		Box section profile (mm)	Box section profile (mm)	No. of front absorbers
Baseline	348	50x25x2.3	50x25x2.3	2
A	373	50x50x3.6	50x25x2.3	2
B	368	50x25x2.3	50x25x2.3	6
C	366	50x25x2.3	50x25x1.6[1]	6

[1] Change material to stainless steel 304

The final deformations after frontal impact, the distance between the driver manikin and steering system and the angle of the steering system for all models are shown in Table 3 and Fig. 8. Displacements of the deformed bus structure are measured at three locations, i.e., the maximum deformation of the left A-pillar (d_1), the maximum deformation of the right A-pillar (d_2), and the maximum deformation of the frontal frame (d_3). The clearances from the steering system are gauged at the driver's knee (c_1), driver's chest (c_2), and driver's lap (c_3). It can be seen that Model A and B pass ECE-R29 regulation and the survival space is maintained after impact; whereas model C does not pass the regulation. However, the deformations and clearances of model C is much improved compared with the baseline model.

For model A, a higher rigidity of the compartment structure is observed as expected and the deformations of the cabin and the pillars are less than those of the baseline design. In model B and C, in which the crumple structures are reinforced, the left A-pillar's deformation is larger than that of the baseline structure. However, the deformed angle of the steering system is much less, especially in model B. This is due to protection of the front frame by dissipating the impact energy to the front structure as can be noticed by the smaller values of front frame deformation (d_3).

Table 3 Deformed configurations for different models.

Model	Final Deformation (mm)			Clearance between manikin and steering system (mm)			Deformed angle of steering system
	d_1	d_2	d_3	c_1	c_2	c_3	θ (degree)
Baseline	255	199	287	-114*	-72	-125	21
A	200	150	253	42	41	14	12
B	324	118	188	94	83	67	8
C	366	153	169	23	28	5	12

*minus sign indicates the intrusion of the steering system into the manikin's body

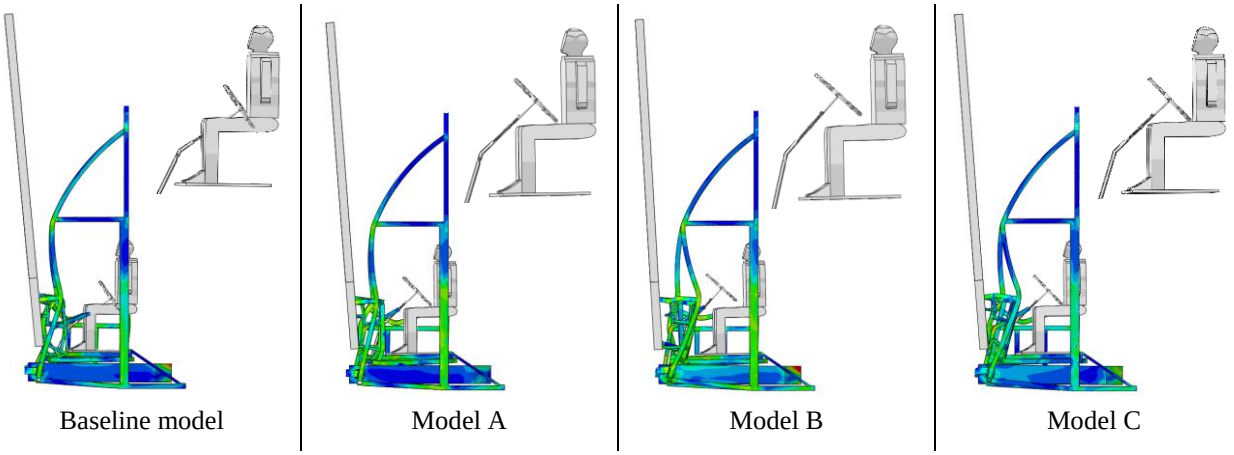

Fig. 8 Final deformed shape of the baseline and improved models

The maximum displacements at each time instance during impact are plotted for the left A-pillar (Fig. 9a) and the frontal pillar (Fig. 9b). It can be seen that model A with reinforcement of the compartment structure possesses the smallest maximum deformation which is 57% of that of the baseline model. However, without protection of the steering system the maximum displacement of the front pillar is quite large and results in a higher deformed angle of the steering system compared to other improved model. The recorded accelerations of the driver dummy for all cases are noticed to be similar with the maximum value of approximately 50g at the beginning of the impact.

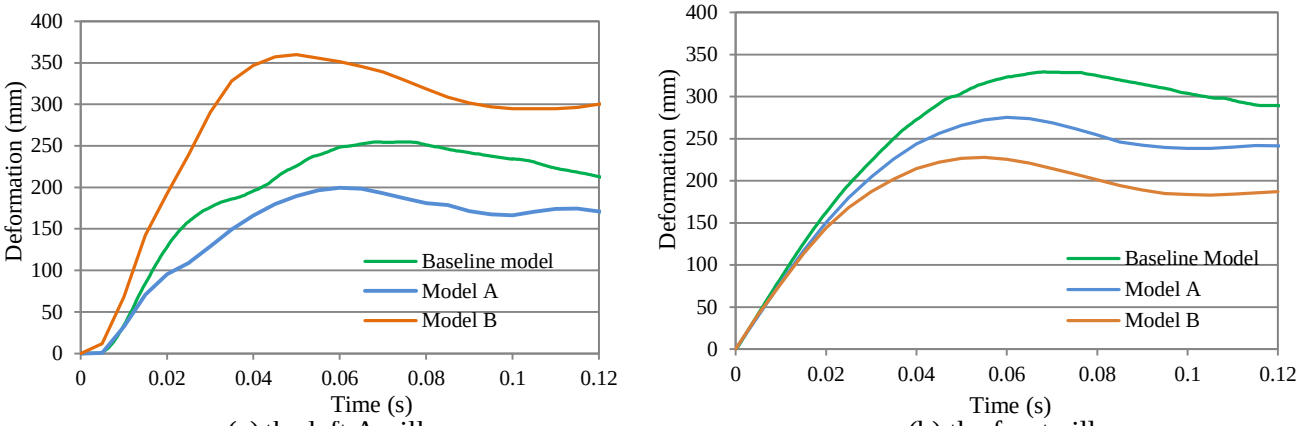

(a) the left A-pillar (b) the front pillar

Fig. 9 Displacement at reference nodes

Fig. 10 illustrates energy absorption ratio of the compartment and crumple structures for all models. After the improvement, the ratio of absorbed energy in the crumple structure is observed to be higher, particularly, model C where the material of higher toughness is used as the absorbers. With higher energy absorption The energy absorbers with crush initiators to support the deformation behavior of building regular folds, in which the energy absorption is much higher than the former mode should be implemented. Therefore, the most appropriate design would be the one optimizing the

effects of rigid compartment and high toughness of crumple structure while the bus weight that directly relate to the bus cost is minimized.

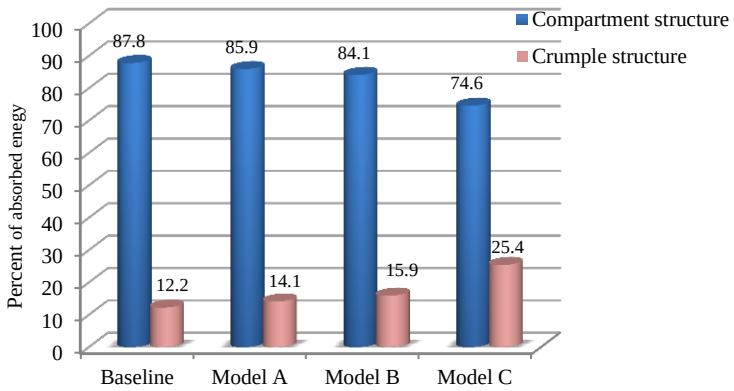

Fig. 10 Energy absorption ratio of compartment and crumple zones

5. CONCLUSIONS

In the present paper, failure mechanism under frontal collision of a passenger bus manufactured in Thailand is analyzed by means of explicit dynamic finite element analysis. It was shown that the current design does not pass ECE-R29 regulation with a large intrusion of the steering system into the driver manikin of 125 mm. Three improved models are designed based on two structural zones, i.e., a front crumple structure to absorb impact energy and a rigid compartment structure to protect the driver from any contact with the vehicle. To enhance the energy absorption capacity of the crumple zone, crush initiator can be included in the bus front design. Optimization of the bus front structure for energy dissipation management should also be further studied.

ACKNOWLEDGEMENTS

The research described in this paper was financially supported by the Natural Research Council of Thailand.

REFERENCES

Abramowicz, W. (2003), “Thin-walled structures as impact energy absorbers”, *Thin-Walled structures*, **41**, 91-107.

Al-Thairy, H. and Wang, Y.C. (2014), “Simplified FE vehicle model for assessing the vulnerability of axially compressed steel columns against vehicle frontal impact”, *Journal of Constructional Steel Research*., **102**, 190-203.

Ambati, T., Srikanth, K.V.N.S. and Veeraraju, P. (2012), “Simulation of vehicular frontal crash-test”, *International Journal of Applied Research in Mechanical Engineering.*, **2**(1), 37-42.

Cerit, M.E., Guler, M.A., Bayram, B. and Yolum, U. (2010), "Improvement of the energy Absorption Capacity of an Intercity Coach for Frontal Crash Accidents", *11th International LS-DYNA Users Conference.* Detroit. 1315-1324.

Eren, I., Gur, Y. and Aksoy, Z. (2009), "Finite element analysis of collapse of front side rails with new types of crush initiators", *International Journal of Automotive Technology*, **10**(4), 451-457.

Matsumoto, A.T., Drimeier, L. and Alves, M. (2012), "Performance of polymeric reinforcements in vehicle structures submitted to frontal impact", *International Journal of Crashworthiness*, **17**(5), 479-496.

Mirzaamir, R., Esfahanian, M., Ziaei-Rad, S. (2012), "Crash test simulation and structure improvement of IKCO 2624 truck according to ECE-R29 regulation", *International Journal of Automotive Engineering*, 2(3). 180-192.

NHTSA's National Center for Statistics and Analysis (2014), "Traffic safety facts 2013 data", 1-7.

Nia, A.A., Parsapour, M. (2014), "Comparative analysis of energy absorption capacity of simple and multi-cell thin-walled tubes with triangular, square, hexagonal and octagonal sections", *Thin-Walled structures*, **74**, 155-165.

Prochowski, L., Zielonka, K. and Zuchowski, A. (2011), The analysis of occupant motion in frontal barrier impact of a chassis frame vehicle, *Journal of KONES Powertrain and Transport*, **18**(1), 491-502.

Raich H (2003) "Safety analysis of the new actros megaspace cabin according to ECE-R29/02", *4th European LS-DYNA Users Conference*, Germany

Sidhu, M.S. (2013), "Frontal Crash of Bus", *2013 India Altair Technology Conference*. Bangalore, India.

Zhang, X., Wen, Z, Zhang, H. (2014), "Axial crushing and optimal design of square tubes with graded thickness", *Thin-Walled Structures*, **84**, 263-274.