The 2017 World Congress on
Advances in Structural Engineering and Mechanics (ASEM17)
28 August - 1 September, 2017, Ilsan(Seoul), Korea

Finite element analysis of HSC column confined with HSS ties

*Ahsan Parvez[1)], Mohsen Khalaj Khalajestani[2)], Stephen James Foster[3)] and Hamid Valipour[4)]

[1),2),3),4)] *School of Civil and Environmental Engineering, UNSW Sydney, Australia*
[*] *m.parvez@unsw.edu.au*

ABSTRACT

Experimental and numerical studies on high-strength concrete (HSC) columns indicated that the strength of columns is affected by brittleness behavior of HSC and early cover spalling. The ductility of HSC columns can be improved by providing high level of confinement to the core, which can be met by using high-strength steel (HSS) tie reinforcement. This paper presents a finite element model on the behaviour of HSC column confined with HSS tie using ATENA-3D. Combined fracture-plastic model was used to model the concrete. Columns were modelled using solid elements for concrete and embedded truss elements for reinforcement. Due to symmetry, one quarter of the column was modelled and appropriate boundary conditions were applied on the symmetry planes. The model was verified against experimental results and a reasonable correlation was observed concerning ultimate strength and the post-peak response. Moreover, the experimentally observed cracking of the concrete cover was captured by the analysis.

1. INTRODUCTION

The use of high-strength concrete (HSC) is indispensable in high-rise building construction to ensure sufficient strength in the structure. As strength and ductility of concrete are inversely proportional, the brittle behaviour of HSC is a significant weakness. The strength of HSC columns is also affected by spalling of the cover due to the inability of the concrete core to carry increased loads after the cover is shed (Foster 2001; Foster et al. 1998). However, a somewhat less brittle behaviour in columns can be achieved through appropriate confinement detailing of the core concrete; a higher level of confinement is needed in HSC columns to maintain a similar level of ductility to that of normal strength concrete (Foster 2009; Foster and Attard 2001; Foster et

---

[1)] Research Associate
[2)] PhD Student
[3)] Professor
[4)] Associate Professor

al.1998; Saatcioglu and Razvi 1998). There is experimental evidence that columns with the same reinforcement arrangement exhibit similar deformability, irrespective of concrete strength, provided that the ratio of $k_e\rho_s f_{yt}/f_c'$, known as confinement parameter, is maintained (Foster and Attard 1997, 2001; Razvi and Saatcioglu 1999), where k_e is an effectiveness factor, ρ_s is the volumetric ratio of the tie steel, f_{yt} is the yield strength of tie steel and f_c' is the characteristics compressive strength of concrete. Use of high-strength steel (HSS) and maintaining the same ratio of $k_e\rho_s f_{yt}/f_c'$ to that of conventional steel, may result larger tie spacing. Hence, it is expected that use of HSS ties in columns will provide the high level of confinement required to enhance the ductility and strength of the concrete within the core. The requirements of confinement steel are outlined in current building standards, such as AS3600-2009, Concrete Structures. An experimental investigation has been conducted on HSC column confined with HSS tie reinforcement designed as per the provisions of AS3600-2009 to check the adequacy of code requirements (Parvez et al., 2017).

In the last three decades, tremendous progress has been made in the modelling of concrete and the numerical analysis of reinforced concrete structures. When studying the ductility of confined HSC columns, it is important to accurately incorporate the softening behaviour of the concrete. Research on behaviour of confined concrete columns has been extensively undertaken. However, it is difficult to establish the internal micro-mechanisms of the structural response from experimental work alone. Application of the finite-element (FE) method to confined concrete with softening is complicated, because of the complex constitutive relationships involved. Liu and Foster (1998) developed an axisymmetric FE model for confined concrete members based on the explicit microplane formulation. They showed that confined circular columns under concentric loading generate tensile stresses between the cover and the core and high tensile strains exist between the cover-core interfaces at loads significantly below peak-loads. The constrained core and unconstrained cover set up transverse tension stresses at the core-cover interface. Once significant tension across the interface occurs to induce cracking, the cover shell is free to buckle away from the core. This observation was used by Foster et al. (1998) to explain the early cover spalling of HSC columns.

Concrete structures which rely on confinement from steel reinforcement for ductility, cannot be modelled in two dimensions. For studies on the earthquake resistance and on the ductility of concrete columns, it is important to investigate the post-peak, or strain softening, behaviour of the column. Numerical modelling of confined concrete members requires a 3-D formulation due to the effect of stresses acting orthogonal to the directions of the main stresses (Kotsovos and Pavlovic, 1995). As ductility is directly linked to the deformation of the concrete member beyond the peak load, a 3D formulation should be able to correctly incorporate the relatively large deformations expected in the post-peak regime (Ghazi et al., 2002).

A numerical investigation is undertaken to study, in detail, the confinement effect of HSS in HSC column using a commercially available FE package, ATENA 3D, developed by Cervenca Consulting (Cervenca et al., 2002). The numerical model is validated against experimental results obtained from HSC columns confined with HSS tie reinforcement.

2. EXPERIMENTAL INVESTIGATIONS

An experimental program was conducted to investigate the adequacy of current AS3600-2009 design provisions for providing confinement to the core using HSS ties. HSS results wider spacing that, in turn, will reduce congestion of steel. Six 200x200 mm square and six 250x150 mm rectangular section columns were constructed using 100 MPa grade concrete, with 2% longitudinal steel, confined with nominal 750 MPa grade steel ties and loaded at different eccentricities. A clear cover of 15 mm was applied to the reinforcement design by placing plastic spacers on the outer ties. Tie spacing was selected based on the provisions given in AS3600-2009.The column dimensions are given in Fig.1. The columns were designated using the notations such as 2H20-70S, where the longitudinal steel to concrete volumetric ratio is two percent, H identifies high strength concrete, the initial loading eccentricity is 20 mm, the centre-to-centre spacing of ties is 70 mm, S is the type of ties, indicating square ties for this instance.

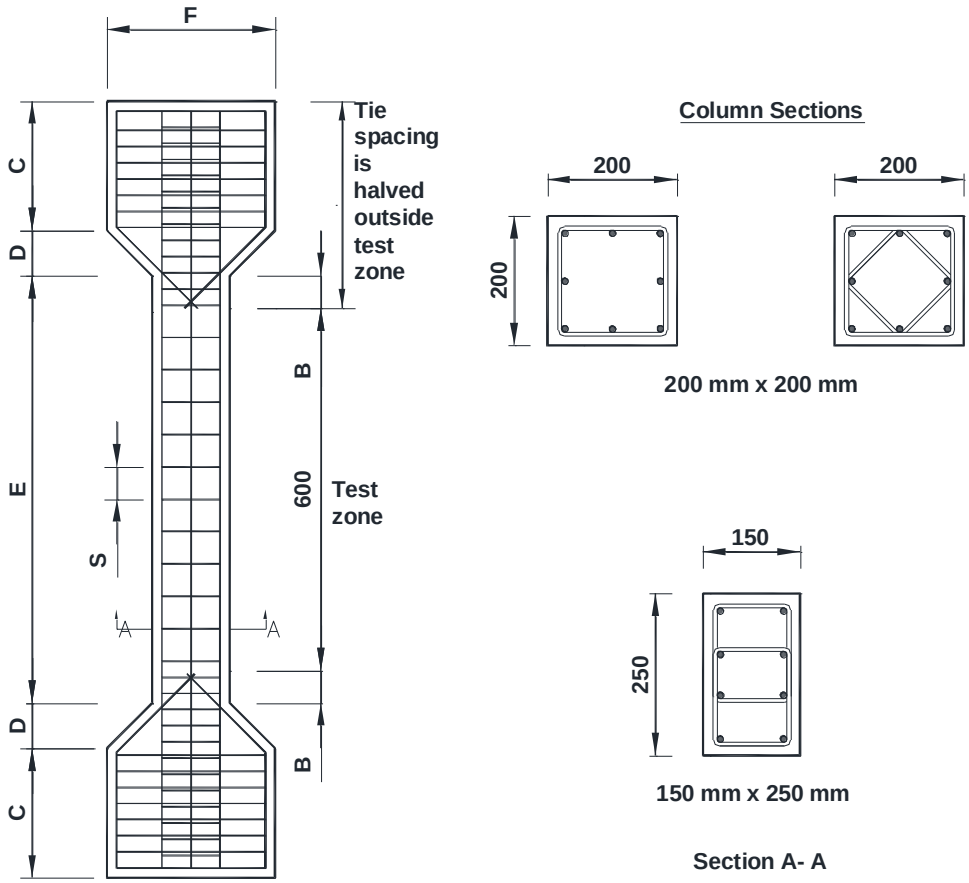

Column Size	C (mm)	D (mm)	E (mm)	F (mm)	Total Length (mm)
200 x 200 mm	350	100	900	400	1800
250 x 150 mm	400	150	1000	480	2100

Fig. 1 Column details (Parvez et al. 2017)

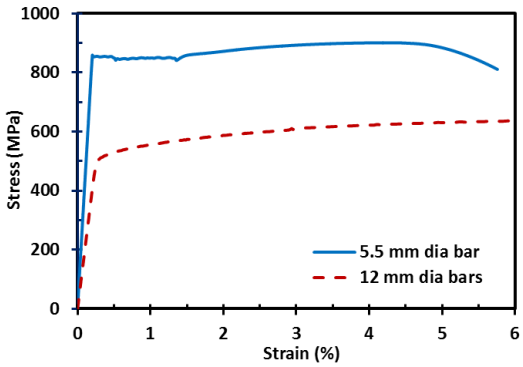

Fig. 2 Stress-strain curves for reinforcing steel

The longitudinal reinforcement consisted of eight Class N 12 mm diameter deformed bars with nominal yield strength of 500 MPa. For the ties Class N 5.5 mm diameter wire with nominal yield strength 750 MPa was used. The stress-strain curves for reinforcement are given in Fig. 2.

All specimens were tested in an Instron 5000 kN stiff testing frame. Linear strain conversion transducers (LSCT) were used to measure axial strain of concrete. The results of four columns that are used for numerical validation are given in Table 1.The reader is referred to Parvez et al. (2017) for further details on the experimental study.

Table 1. Load eccentricity, ultimate load and moment (Parvez et al., 2017)

Specimen ID	Target Initial Load Eccentricity (mm)	[a]Actual Initial Load Eccentricity (mm)	Total Deflection, Δ, at Peak Load (mm)	N_u (kN)	Moment, M_u (kNm)
2H20-70S	20	20	26.2	2263	59.4
2H50-120D	50	61	70.7	1330	94.1
2H0-100R	0	1	2.3	3584	8.4
2H12.5-100R	12.5	11.5	18	2484	44.7
2H25-100R	25	32	45.8	1896	86.9
[a]Actual eccentricities were measured using strains from strain gauges mounted on four corner longitudinal bars at mid-level.					

3. FINITE ELEMENT MODEL

A set of numerical analyses were performed utilizing the software ATENA (Cervenca et al., 2002). ATENA version 5.4.1 has been chosen as the fundamental stage for this study. A complete investigation utilizing ATENA requires a depiction of the nonlinear materials, the model set up, boundary conditions, element input and loading process. The material non-linearity is essentially adopted for this model due to plastic behaviour of concrete. The material models CC3DNonLinCementitious2 (User) are used in this

study to model the concrete and are based on a fracture-plasticity approach which combines constitutive models for tensile (fracture) and compressive (plastic) behaviour.

The fracture model is based on the classical orthotropic smeared crack formulation and crack band model. It utilizes the Rankine failure criterion and is not restricted to any particular shape of hardening or softening laws. A fixed crack approach is used in this study. The plasticity model is founded on the Menetrey-Willam failure surface (Menetrey and Willam, 1995) using a return mapping algorithm for the integration of the constitutive equations. To combine the fracture and plasticity models, a strain decomposition approach introduced by de Borst (1986) is used;
that is:

$$\varepsilon = \varepsilon^e + \varepsilon^p + \varepsilon^f \tag{1}$$

where ε^e, ε^p, and ε^f are the elastic, plastic and fracturing strains, respectively. The new stress state in the plastic model is computed using a predictor-corrector formulation where the plastic corrector is computed directly from the yield function of the return mapping algorithm. The crack opening, *w*, is computed from the summation of the fracturing strain and incremental fracturing strain multiplied by the characteristic length. The full derivation of the material model can be found in Cervenka and Papanikolaou (2008).

When studying the ductility of confined HSC columns, it is important to accurately incorporate the softening behaviour of the confined concrete. A confined concrete model developed by Attard and Setunge (1996) was utilised herein. The σ-Ɛ behaviour of HSC with confining pressure equal to $0.01f_c'$ is given in Fig. 3.

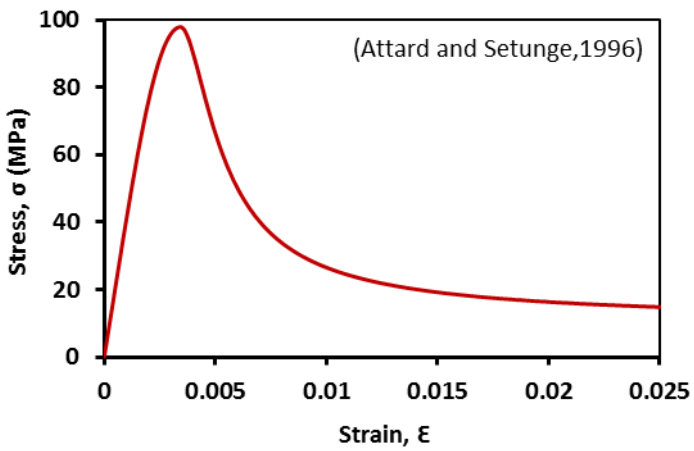

Fig. 3 Stress-strain curve for confined concrete with 1% confining pressure

To simulate the columns, a 3D model was developed. Due to symmetry, one quarter of the column was modelled using solid elements for concrete and embedded truss elements for longitudinal and transverse reinforcement (Papanikolaou and Kappos, 2005). Appropriate boundary conditions were applied on symmetry planes and

compressive displacements were prescribed. In the experiment, the test zone for the full column length was middle 600 mm *i.e.* 300 mm on both sides of horizontal centre line. In the test zone the maximum tie spacing was provided according to the provisions of AS3600-2009 and beyond this section spacing was halved to induce localization at the centreline. In the model, concrete of 300 mm bottom section (test zone) was modelled with CC3DNonLinCementitious2 (User) material model. The rest of the column section was modelled as elastic element. The in-place strength of unconfined concrete was taken to be $0.85f_c'$ for column as suggested by Razvi and Saatcioglu (1999). Table 2 illustrates the material parameters used in ATENA for core concrete.

Table 2 Material parameter input for core concrete model

Property	Value
In situ compressive strength of concrete, f_{cm}	100 MPa
Unconfined concrete strength in column, f_{co}	85 MPa
Elastic modulus, E_c	40,000 MPa
Tensile strength, f_t	3.9 MPa
Characteristic size, l_{ch}	25 mm
Multiplier for plastic flow dir., β	0.5
Fixed crack model coefficient	1

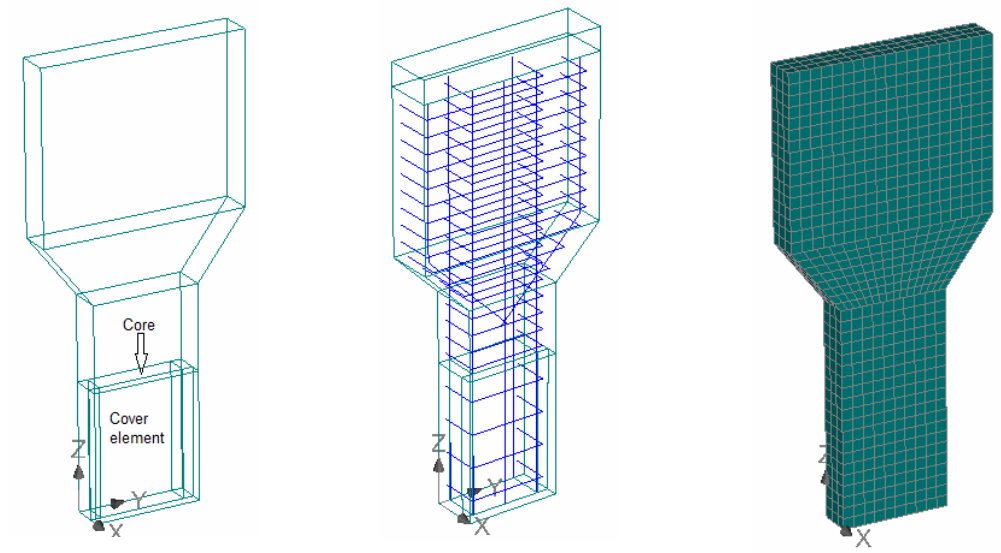

(a) (b) (c)

Fig. 4 Three dimensional FE model of HSC column (a) Cover element, (b) Embedded reinforcement bar, (c) FE mesh

The strength of HSC column is affected by cover spalling. To study the behaviour of concrete columns with the core confined by tie reinforcement, cover spalling was included in the model by setting the cover elements to a low stiffness once a threshold tension strain was reached, similar to that of Liu and Foster (2000). Cover elements were included in the model by adding separate macroelements for cover concrete in the test zone. Cervenca and Papanikolaou (2008) noted that in order to capture the effect the cover cracking the FE mesh size has to be smaller than concrete cover thickness. Hence, the columns were analysed with 25 mm mesh. Fig. 4 shows the cover elements, embedded reinforcement bars and concrete FE mesh.

4. COMPARISON WITH TEST DATA

The model was first verified with the experimental results of two HSC column confined with conventional steel ties from Foster et al. (1997). Then it was verified with five HSC column confined with HSS ties from current study of Parvez et al. (2017).

4.1 Foster el al. (1997)

Foster et al. (1997) tested 12 end-hunched 150 mm square columns with a nominal concrete compressive strength of 100 MPa. Longitudinal reinforcement consisted of four 12 mm diameter deformed bars with yield strength of 420 MPa. The tie reinforcement consisted of 6 mm round bars spaced at either 30, 60, or 120 mm with yield strength of 355 MPa. The columns 2H20-60 and 2H50-60 were selected for analysis. Fig. 5 shows a comparison between numerical and experimental results. Reasonable correlation is observed concerning both the maximum strength and post-peak response.

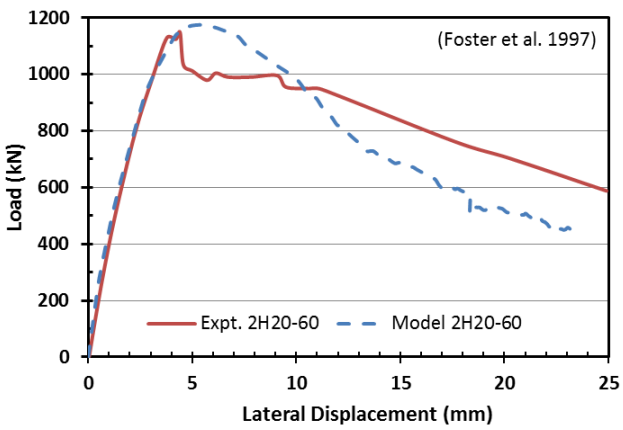

(a)

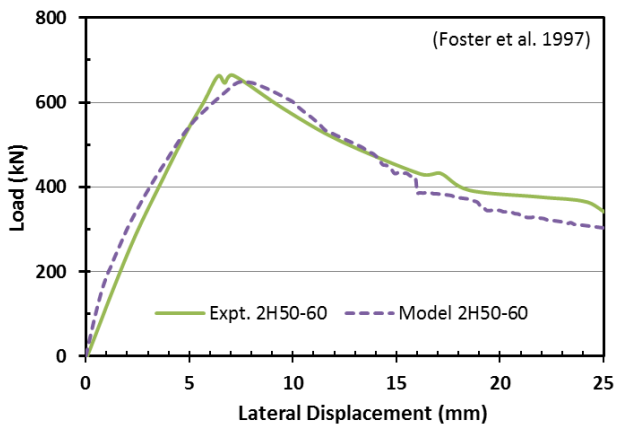

(a)

Fig. 5 FE simulation for load versus lateral displacement (Foster et al., 1997)

4.2 Parvez el al. (2017)

The specimens 2H20-70S and 2H50-120D (section 200x200 mm); 2H0-100R, 2H12.5-100R and 2H25-100R (section 250x150 mm) were selected for FE analysis. The results of the FE analysis are compared with the experimental data. The load versus lateral deflection curves of column 2H20-70S and 2H50-120D are shown in Fig. 6. The FE results match well with the experimental values. In Fig. 7 load versus average strain ($\xi = \varepsilon_{av} + \kappa e$) of column 2H12.5-100R and 2H25-100R are plotted. The strain parameter $\xi = (\varepsilon_{av} + \kappa e)$ is the sum of the average axial strain and the product of the eccentricity (*e*) of the internal axial force and the curvature (*k*) of the section. The specimen 2H0-100R was tested under concentric loading. The load versus axial strain of this column is plotted in Fig. 8. The FE model captured the behaviour of the HSC columns well.

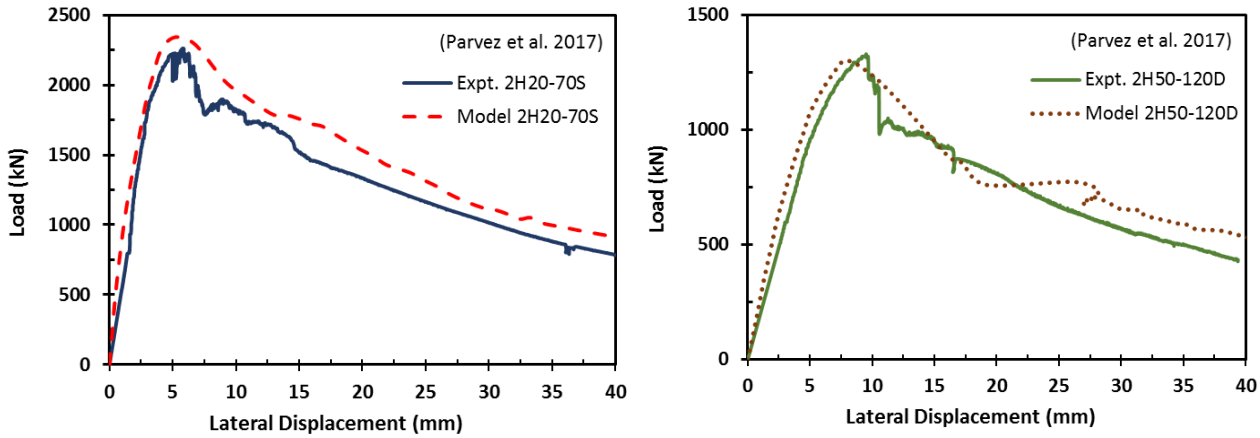

(a) (b)

Fig.6 FE simulation for load versus lateral displacement (a) 2H20-70S, (b) 2H50-120D

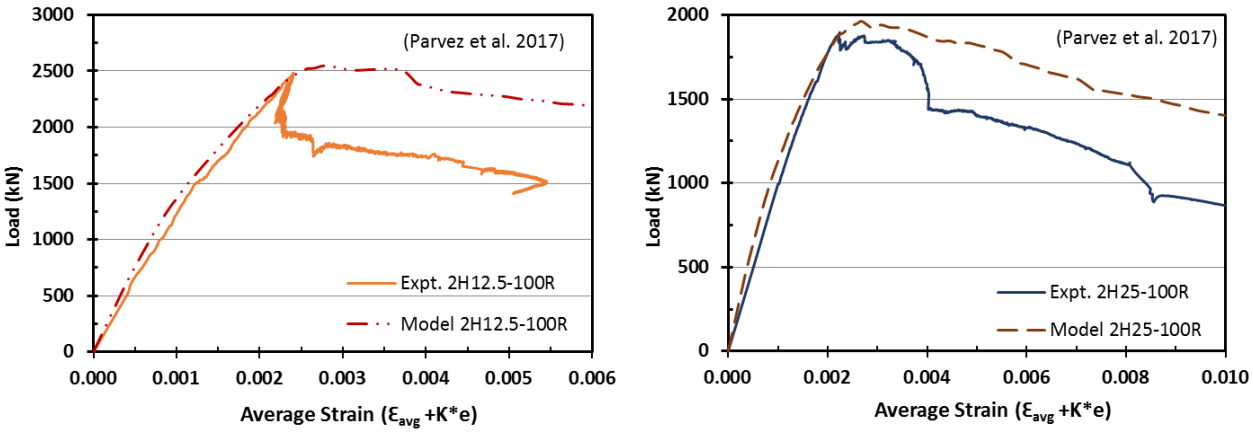

(a) (b)

Fig.7 FE simulation for load versus average strain (a) 2H12.5-100R, (b) 2H25-100R

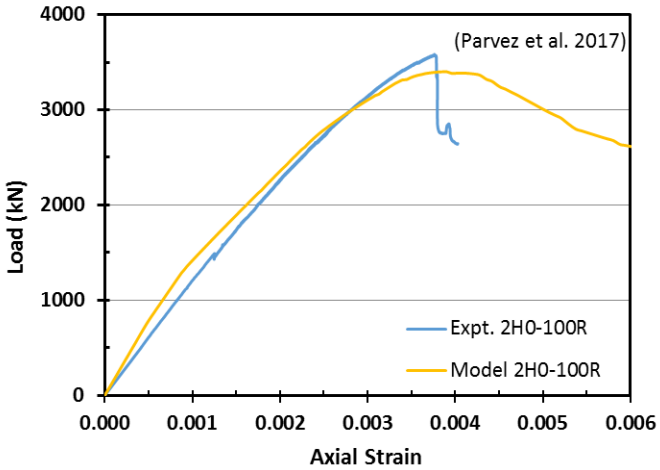

Fig.8 FE simulation for load versus axial strain for 2H0-100R

The deformed shape of the specimen 2H12.5-100R is shown in Fig. 9. The experimentally observed cracking of the concrete cover was also successfully captured by the analysis (Fig. 10).

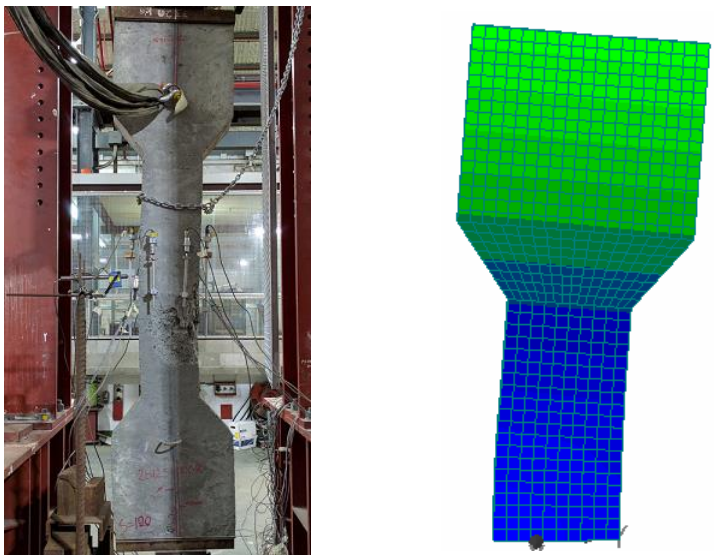

Fig. 9 Deformed shape of specimen 2H12.5-100R and FE simulation

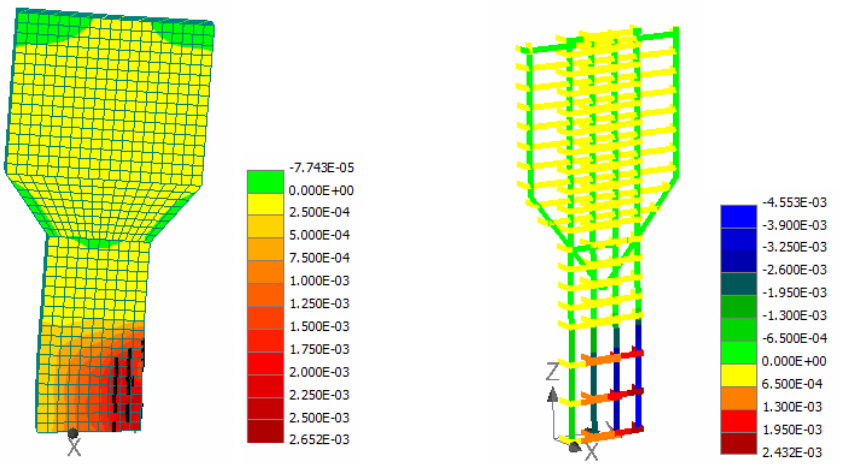

(a) (b)

Fig.10 FE analysis results at peak load for specimen 2H12.5-100R (a) cracking of concrete cover and concrete strain, ε_{yy}, (b) Tie strain, ε_{xx}

5. CONCLUSIONS

In this paper a validation of the behaviour of HSC column confined with HSS tie is made through a comparison of numerical analysis and experimental results. The numerical analysis was performed using a commercially available software package, ATENA 3D with the stress-strain model for confined concrete of Attard and Setunge. The results of the numerical analysis indicate that the behaviour of HSC can be modelled using ATENA when the behaviour of cover spalling is taken in to consideration. The model was shown to compare well with the experimental data in capturing the non-linear responses of the HSC columns.

REFERENCES

Attard, M.M. and Setunge, S. (1996), “Stress-strain relationship of confined and unconfined concrete,” *ACI Mat. J.*, **93**(5),432-441.

de Borst, R. (1986), “Non-linear analysis of frictional materials,” PhD thesis, Delft University of Technology, Netherlands.

Cervenka, V., Cervenka, J., and Pukl, R. (2002), “ATENA- A tool for engineering analysis of fracture in concrete,” Sadhana Academy Proceedings in Engineering Sciences, 27(4), 485-492.

Cervenka, J., and Papanikolaou, V.K. (2008), “Three dimensional combined fracture-plastic material model for concrete,” *International J. of Plasticity*, **24**, 2192-2220.

Foster, S.J., (2009), “Detailing of high strength concrete columns to AS3600-2009”, *Concrete in Australia*, **35**(3), 37-46.

Foster, S.J., (2001), "On behaviour of high-strength concrete columns: cover spalling, steel fibers, and ductility", *ACI Struct. J.*, **98**(4), 583-589.

Foster, S.J. and Attard M.M, (2001), "Strength and ductility of fibre-reinforced high-strength concrete columns", *J. Struct. Eng*., **127**(1), 28-34.

Foster, S. J. and Attard, M. M., (1997), "Experimental tests on eccentrically loaded high-strength concrete columns," *ACI Struct. J.*, **94**(3), 295-303.

Foster, S. J., Attard, M. M., and Kokis, N. (1997), "Tie confinement in eccentrically loaded high strength concrete columns", Uniciv report no R-363, University of New South Wales, 1997, Sydney, Australia.

Foster, S.J., Liu J. and Sheikh S.A., (1998) "Cover spalling in HSC columns loaded in concentric compression", *J. Struct. Eng.*, **124**(12), 1431-1437.

Ghazi, M., Attard, M.M., and Foster, S.J. (2002), "Modelling triaxial compression using the Microplane formulation for low confinement," *Comp. & Struct*., **80**, 919-934.

Kotsovos M.D. and Pavlovic M.N., (1995), Structural concrete: finite element analysis for limit state design. London: Thomas Telford Publications.

Liu, J., and Foster S.J., (2000) "A three-dimensional finite element model for confined concrete structures", *Comp. and Struct*., **77**,441-451.

Liu, J., and Foster S.J., (1998) "A finite element model to study the behaviour of confined concrete columns", *J. Struct. Eng*., **124**(9), 1011-7.

Menetrey, P., and Willam, K.J. (1995), "Triaxial failure criterion for concrete and its Generalization," *ACI Struct. J.*, **92**(3), 311-318.

Papanikolaou, V.K., Kappos, A.J., (2005), "Modelling confinement in concrete columns and bridge piers through 3D nonlinear finite element analysis," In: *fib* Symposium Keep Concrete Attractive, Budapest, Hungary, May, 488-495.

Parvez, A., Foster, S.J., Valipour, H., and McGregor, G., (2017), "Strength and ductility of high-strength concrete columns confined with high-strength steel ties," Proceedings of Advances in Concrete Materials and Structures, Adelaide, Australia Oct 22-25.

Razvi, S. and Saatcioglu M., (1999), "Confinement model for high-strength concrete", *J. Struct. Eng.*, **125**(3), 281-289.

Saatcioglu, M. and Razvi, S. R., (1998), "High-strength concrete columns with square sections under concentric compression," *J. Struct. Eng.*, **124**(12), 1438-1447.

Standards Australia,(2009),"Concrete structures (AS3600-2009)", Sydney, Australia.