The 2017 World Congress on
Advances in Structural Engineering and Mechanics (ASEM17)
28 August - 1 September, 2017, Ilsan(Seoul), Korea

Investigation of failures and strengthening techniques for shaft supported elevated tanks

Mehdi Nezhad Naderi [1*] and Freshteh Bahari Nobakht [2]

[1-] Department of Civil Engineering, Tonekabon Branch, Islamic Azad University, Tonekabon, Iran and member of young researcher society, (corresponding author) Email: mehdi2930@yahoo.com
[2-] Department of Civil Engineering, Somesara Branch, Islamic Azad University, Somesara Iran and member of young researcher society, Email: Rozhina.saghafi91@gmail.com

ABSTRACT

Safety assessment of shaft supported elevated tanks is very important as a vital arteries and defense issues. Therefore the behaviors of these tanks are important against seismic loads and the proper functioning of an earthquake. Damage to shaft supported elevated tanks during past earthquakes indicates a lack of sufficient resistance to lateral loads caused by earthquake. A lot of shaft supported elevated tanks for storage of water need to study and are emphasized on seismic retrofitting of these structures. Variable height is considered at 21, 35 and 49 m. In the numerical model the fluid in the tank is assumed at 25% and 50%, 75% and 100% of the total volume of the tank. Air tanks in these modes will be analyzed by the spectral dynamic analysis. In this study, the seismic load is presented on a shaft supported elevated tank in Somehsara in Iran to investigate failures and strengthening techniques of this structure.

Keywords: Strengthening techniques, Qualitative assessment, Shaft supported elevated tank, Seismic retrofitting.

1. Introduction

Assessment and the safety of air tanks for storage of water are very important as a vital arteries and defense issues. Therefore, the behavior and the proper functioning of the vessels against seismic loads during an earthquake has great importance. In a separate report the issue was raised in 1985 Mexico City earthquake and the earthquake in drinking water reservoirs and treatment plants were destroyed. As a result, more than 4 million people had not for three weeks water. In 1995 Kobe earthquake in Japan, tanks, ponds, water purification and distribution network of the city had serious damage (Sadeghi Nia and et al., 2013). Sedghi and et al., 2012 paid to the effects of type of basis on dynamic response of concrete elevated tanks. Seismic behavior study of earthquake loading vessels due to their widespread use and high levels of seismicity of the country is very important. Mirjalili and Najafi oven in 2013 to investigate the seismic behavior of steel moment frame aerial tanks with water and structures have the effect of interaction. Rahbar in 2015 studied the dynamic behavior of Concrete Elevated Tanks. In recent earthquake in Iran much air tanks, including air tank in Rasht in Gilan at 1990 earthquake had serious injuries. So more precisely study of the behavior of structures under seismic conditions is essential.
In this paper, the behavior of the three reservoirs with the same height and volume of the center shaft of the two states without the frame and the frame is considered. Mentioned reservoir modeling using finite element software ansys and seismic performance of each of these tanks half full and filling in the blank state was evaluated using linear dynamics analysis. Shear basis and horizontal displacement of the highest point of the structure are provided by a combination of three components of Tabas earthquake and impact on response of types of tank base structures have been compared.

2. Methods

Software Engineering SAP to align with analytical methods of technical condition of the building, over the past 30 years has been introduced for civil engineering projects. The software in the field of transport, industry, public works, construction of stadiums and other facilities to meet the needs of engineering, as well as in the construction of their projects will benefit from the advantages of this program.
It is based on three dimensional elements graphical modeling environment in a wide range of engineering analysis and design options complete the project in a powerful user interface is provided. SAP2000 today as the most comprehensive, efficient action plan structured to achieve the overall goals of engineers has been introduced (Baji, and Hashim 1383).

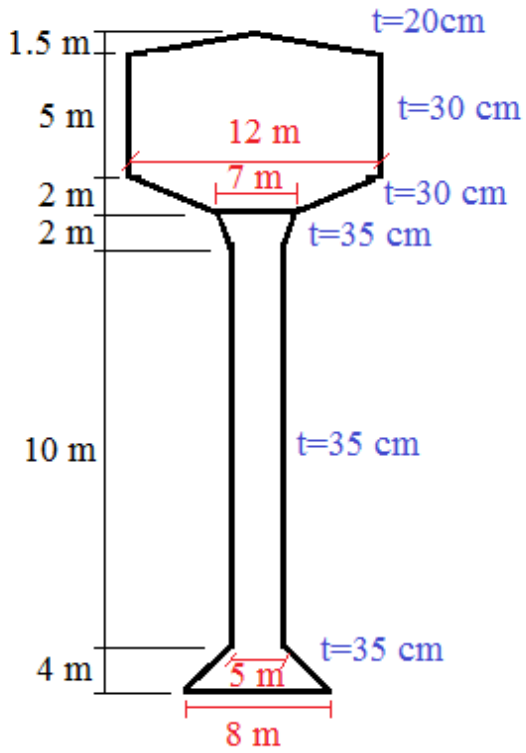

Figure 1: Geometry modeling

Table 1: Profile of concrete and steel reinforcement Cases

parameters	Concrete	Steel
Modulus of elasticity	2.61 E+9 (Kgf	2.039 E+10 (Kgf)
Poisson's ratio	0.2	0.3
Yield stress	3000000(Kgf)	3000000(Kgf)
weight per unit volume	2300 kg/m3	7849 kg/m3

2. Results

In the first part analysis concrete tank water levels in three different modes are analyzed. Modeling and its results are in accordance with Figures 2 to 5.

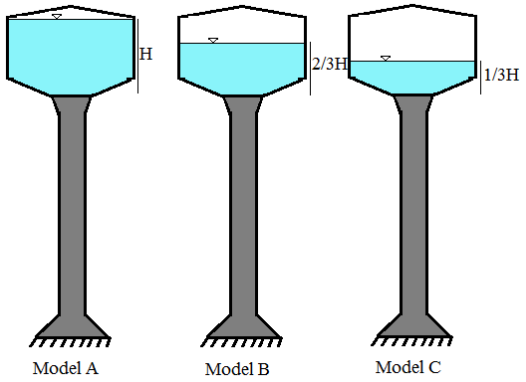

Figure 2: Scenarios modeling the water level inside the tank

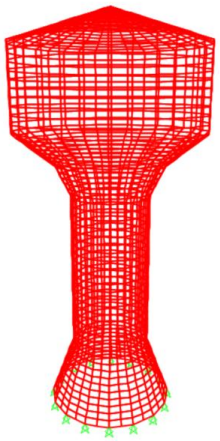

Figure 3: Elements of the software and the overall shape of the tank

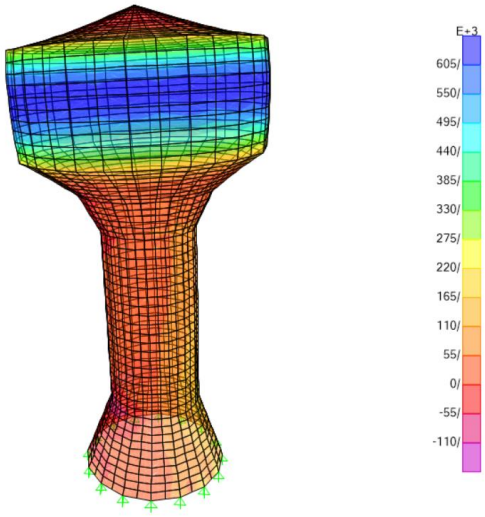

Figure 4: A model of axial force created in the tank

It can be inferred from Figure 4 that the maximum force created at the top of the tank when the tank is full of water is about 60.5 kN.

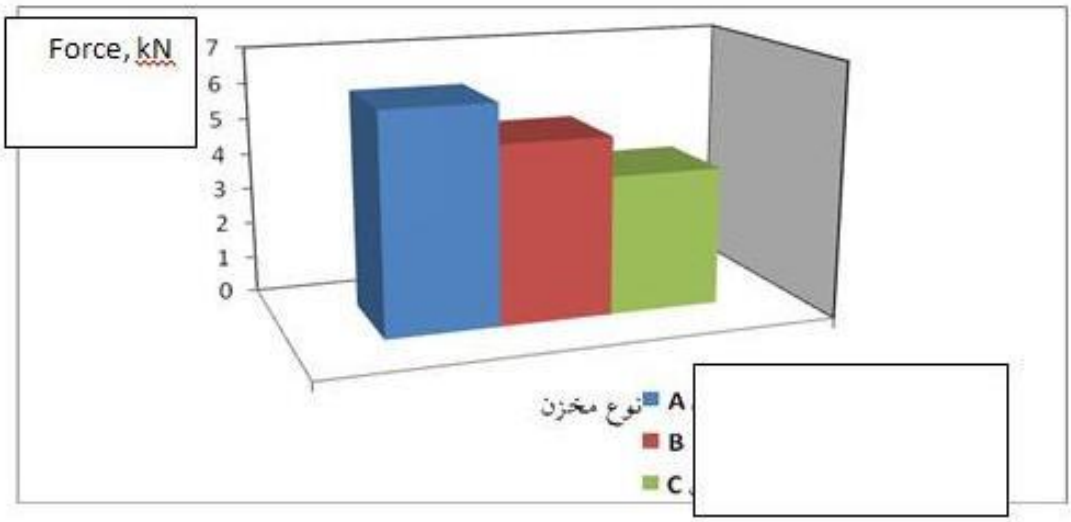

Figure 5: Compare the force in the reservoir models

It can be inferred from Figure 5:
1. Increasing of the water level inside the tank to100 percent from 30 percent caused dramatic increases in force.
2. The water level in the tank plays an important role in seismic vessels.
3. The power difference between the minimum and maximum water level of about 50 percent which is pretty impressive.

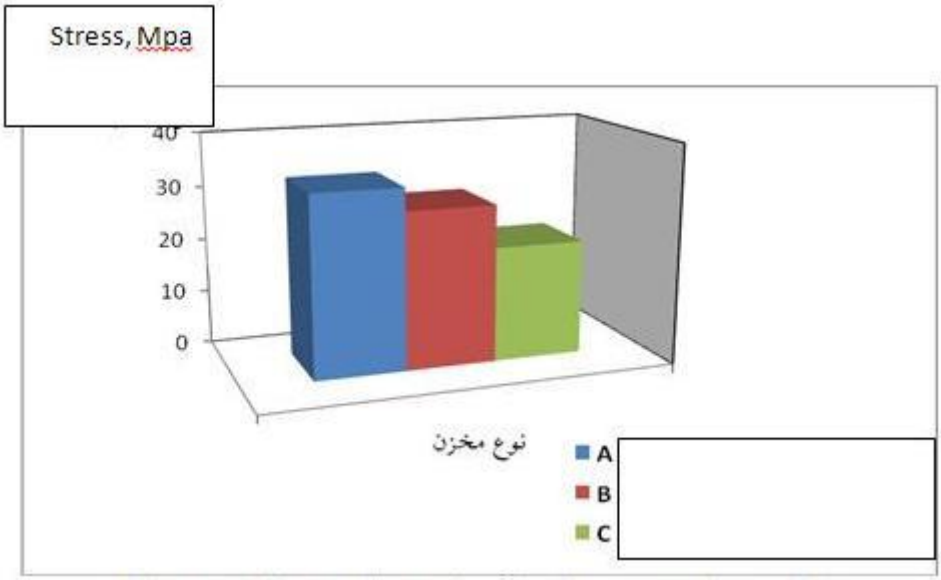

Figure 6: Comparison tension in reservoir models

It can be inferred from Figure 6:
1. Increase the water level inside the tank to 100 percent from 30 percent, a third tank to dramatic increases in stress caused by tank shell.

2. Stresses are pretty impressive in the difference between the minimum and maximum water level of about 40%. It is recommended that attempts should be made in seismic areas. If the tanks are need to be filled completely.

In this part of the reservoir analysis model A dynamic analysis takes time history.
In time history analysis, structural response using dynamic relations in short time steps is calculated. To perform dynamic analysis, acceleration time history seismic mapping is available that history is studied.
The maximum horizontal acceleration PGA = 0.7g is. Mapping acceleration time history is shown in Figure 7. Notably, at the time of 8 to 10 seconds maximum acceleration has been mapped.

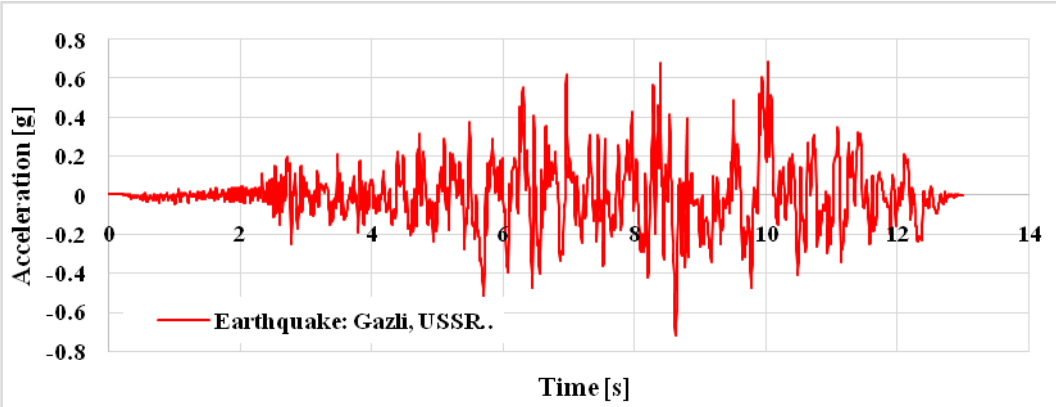

Figure 7: dynamic analysis based on long history

In the next part of all three reservoirs under seismic load are in a period of 12 seconds. The horizontal and vertical displacement of crest of tanks are compared. The analysis are similar to Fig. 8 and 9.

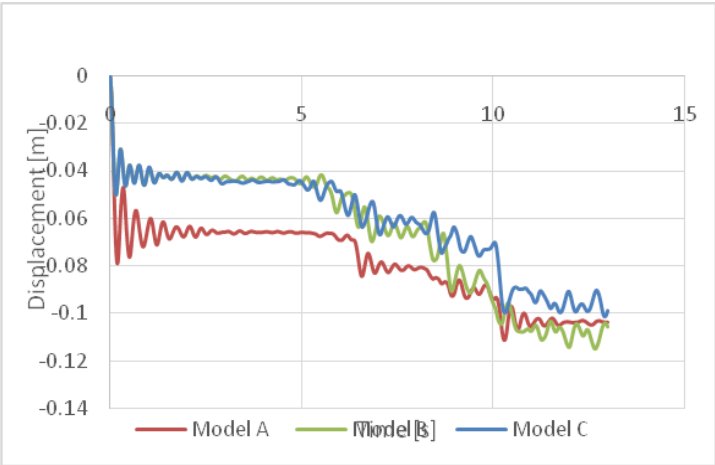

Figure 8: Comparison vertical displacement reservoir crown in three models

Figure 8 is the understanding that:
1. In the first few seconds of seismic time when the tank is full of water shows greater displacement.
But with increasing duration of load and seismic shake, because Lighter reservoir model B shows a slight further displacement.
2. The maximum displacement of about 11 cm in the range of 10 to 12 seconds has happened.
3. Reservoir model C due to the lower elevation of the water in the tank has suffered less displacement.

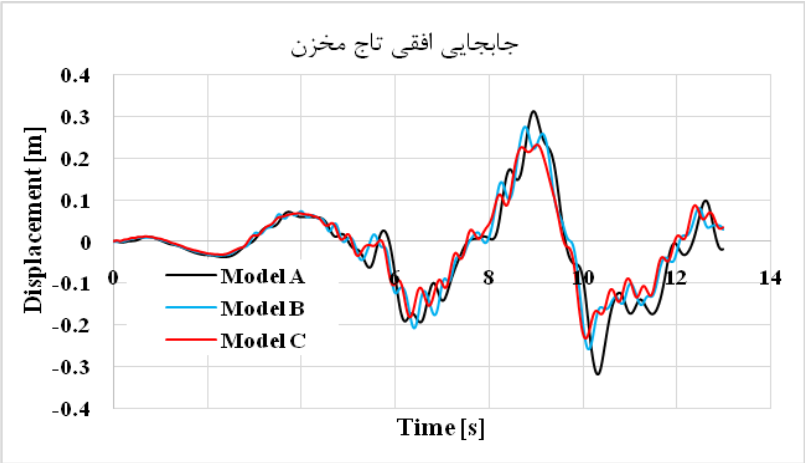

Figure 9: Comparison of horizontal displacement reservoir crown in three models

Figure 9 is the understanding that:
1. The horizontal displacement of the three horizontal seismic reservoir model because of the greater amount of time.
2. The horizontal displacement horizontal displacement reservoir crown three models are very different from each other.
3. The maximum horizontal displacement of 30 cm crown tank, which is about three times the vertical displacement of 11 centimeters.

In this area of research to load and load combinations will initially pay in an empty water tank. The loading of the following points:
Only dead loads on the tank structure and tank weight is entered.
Another dead time is not inserted into the tank.
Water pipes and other equipment are regardless of the weight of the tank (Baji, and Hashim, 2003). Surface water pressure for a pressure chamber into the tank and the tank is perpendicular to it anywhere on the surface.
The nature of the fluid pressure is that pressure loads in any direction and to apply the same amount it is perpendicular to the side of the adjacent wall.

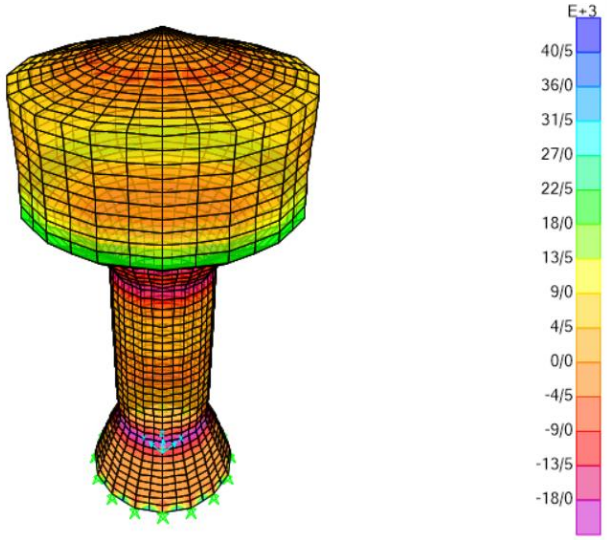

Figure 10: The axial force created by the combination of the empty tank D

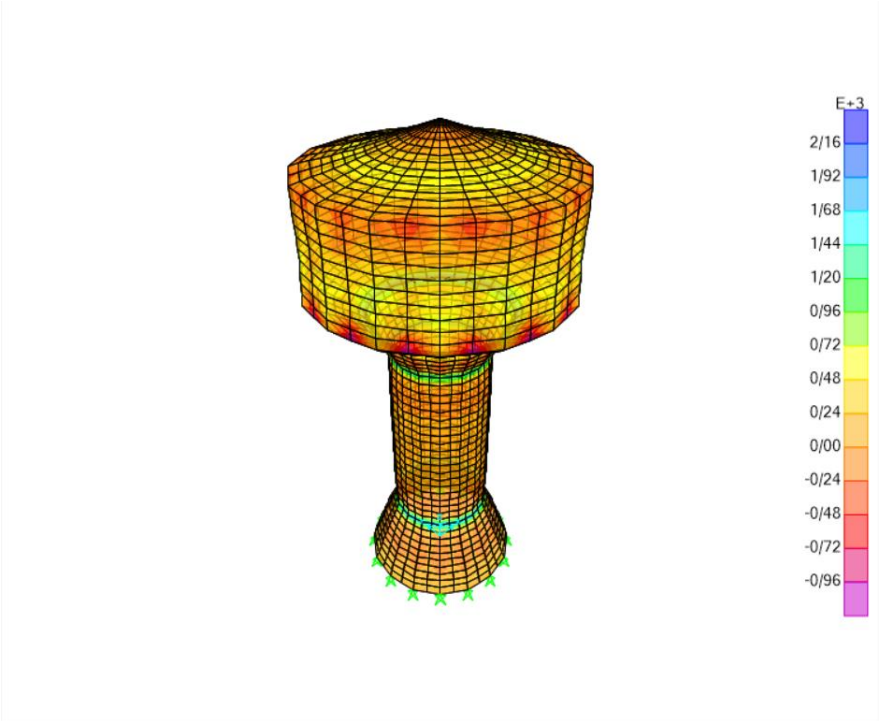

Figure 11: Moment generated by the load combination in the empty tank D

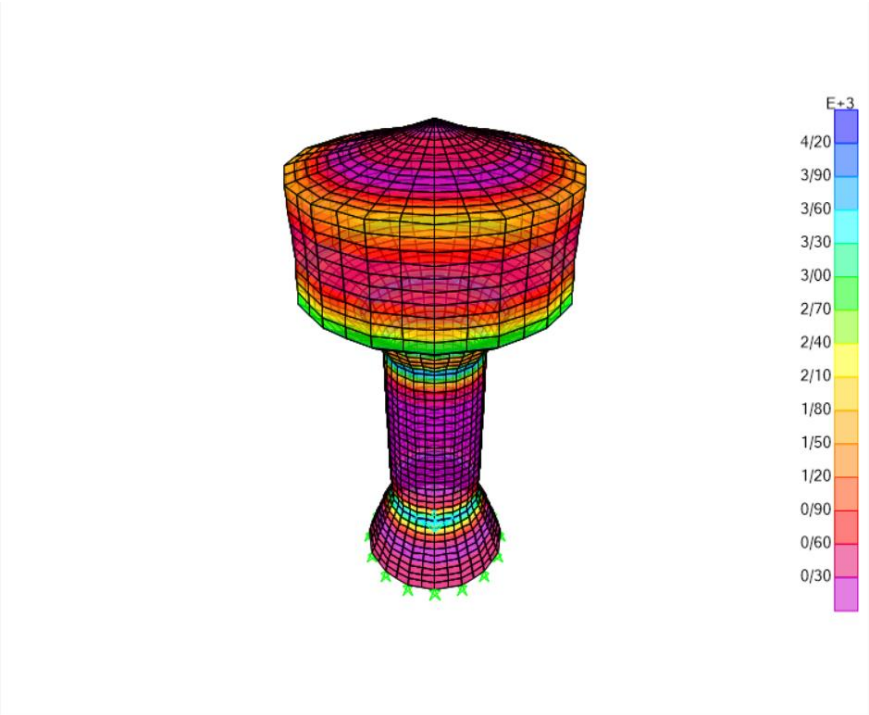

Figure 12: The shear force created by the combination of the empty tank D

In accordance with the charts of 10 to 12 times when combined dead weight alone axial force, shear force and bending moment kN respectively: 405 kN and 45 kN and 21 kN. M.

3. Discussion and conclusion

The results are:
1. performance air tanks and structural system depends on the type of water.
2. Select the type of structural system suitable for tank base, it is better to choose systems that transform their maximum at the junction of the base and not the tank.
3. Increase the water level inside the tank to 100 percent from 30 percent, a third tank to tank caused dramatic increases in force.
4. The water level in the tank plays an important role in seismic vessels.
5. The power difference between the minimum and maximum water level of about 50 percent which is pretty impressive. It is recommended that attempts should be made in seismic areas If the tanks need to be filled completely.
6. Most displacement of about 11 cm and in the range of 10 to 12 seconds has happened.
7. Tank Model C due to the lower elevation of the water in the tank has suffered less displacement.

4. Refrences

1. Baji, H. and hashmi, J. (2003). "Modeling techniques, computerized structural analysis and design in the form of practical projects using the SAFE-ETABS-SAP2000. Publications thinkers.
2. Bozorgmehrnia, S. and Ranjbar, M. (2013). "The seismic behavior of Concrete Elevated water storage tanks at the base of the shaft and frame shape," .9th International Congress on Civil Engineering.
3. Rahbar, J. (2013). "Dynamic Behavior of Concrete Elevated Tanks" development-oriented. The first National Conference on Civil Engineering, Architecture, Electrical and Mechanical Iran.
4. Sadeghi Nia, S., Ershadi, S. and Mayssami, H. (2006). "Exploring ways to improve water storage tanks under dynamic loads caused by the earthquake," Journal of Development and Improvement .N 6.
5. Sedghi, M., Navaeniya, B. and Kalani Saroukolaei, L. (2012). "The effect of type of basis on dynamic response of concrete elevated tanks" .3th National Earthquake Conference and structures.
6. Mirjalili, A and Najafifar, E. (2013). "Seismic Response of aerial tanks of steel moment frames considering the effect of interaction with water and Structures" The first National Conference on Seismology and Earthquake Engineering.