*The 2019 World Congress on*
***Advances in Structural Engineering and Mechanics (ASEM19)***
*Jeju Island, Korea, September 17 - 21, 2019*

# Seismic behavior of pile-supported bridges considering SSI and structural non-linearity

*Muhammad T.A. Chaudhary[1)]

[1)] *Department of Civil Engineering, Kuwait University, Khalidya campus, Kuwait*
[1)] tariq.chaudhary@ku.edu.kw

## ABSTRACT

Soil-structure interaction (SSI) in bridges under seismic excitation is a complex phenomenon which involves coupling between the non-linear behavior of bridge pier columns and SSI in the soil-foundation part. It is a common practice in the study of SSI to model the bridge piers as linear elastic while treating the soil and foundation with a non-linear or an equivalent linear modeling approach. Consequently, the contribution of soil and foundation to the SSI phenomenon is disproportionately highlighted. The present study considered non-linear behavior of bridge piers in FEM model of a 4-span, pile-supported bridge that was designed for five different soil conditions in a moderate seismic zone. The FEM model of the bridge system was subjected to a suite of 15 actual ground motions representative of three levels of earthquake hazard (i.e. Design Basis Earthquake, Functional Evaluation Earthquake and Maximum Considered Earthquake). Results of the FEM analysis were used to delineate the influence of pier column non-linearity and SSI on critical design parameters of the bridge system. It was found that pier column non-linearity influenced seismic base shear more than SSI for majority of the analysis cases for the class of bridge investigated in the study. ……

## 1. INTRODUCTION

SSI is an important phenomenon in the response of bridges subjected to seismic forces. Inclusion of SSI effect in the design of bridges is currently done in an approximate way or ignored altogether (NEHRP 2003). However, it has been demonstrated that SSI cannot be ignored for all classes of bridges (Mylonakis & Gazetas 2000). SSI in bridges has been studied analytically (Ciampoli & Pinto 1995, De Carlo et al. 2000 among others) as well as from field testing and recorded seismic accelerations (Chaudhary et al. 2001, Farino et al. 2012 among others).

The influence of reinforced concrete pier column inelasticity on the performance of bridges has also been thoroughly investigated from the strength and ductility point of

[1)] Assistant Professor

view. Bridge piers are the most vulnerable components in a bridge and have sustained heavy damages in the past earthquakes resulting in bridge closure and causing considerable direct and indirect economic losses to the society. As pier columns are the main supporting elements of the bridge, therefore any change in their shape, size and strength directly influence the seismic performance of a bridge.

The main objective of the study is to incorporate SSI as well as pier column non-linearity in a FEM model of a typical bridge founded in various soil profiles and to study the influence of SSI and pier column inelasticity on bridge deck acceleration, deck displacement and seismic shear force when subjected to a suite of seismic ground motions.

## 2. METHODOLOGY

In order to undertake the study, a 4-span continuous bridge segment of a typical elevated urban expressway was selected as shown in Fig. 1. The bridge was located in a moderate seismic zone with design PGA of 0.2g. The subsoil conditions comprised of AASHTO (2010) classes C and D. These soil classes were further subdivided into five soil profiles to fill in the gaps in shear wave velocity (Vs) as reported in Table 1. Group of 11 piles, whose layout is depicted in Fig. 2, were designed for each soil profile according to the current design practice. Pile group stiffness in the vertical, horizontal and rocking modes were computed according to the procedures of Dobry & Gazetas (1988) and Makris & Gazetas (1992) and are listed in Table 3.

A 3D FEM model of the bridge was built in STAAD in which the bridge super-structure and pier columns were modeled with beam and plate elements while the pile group foundations were modeled by Winkler springs. Fig. 3 shows the components of the FEM model. Non-linear behavior of the pier columns was

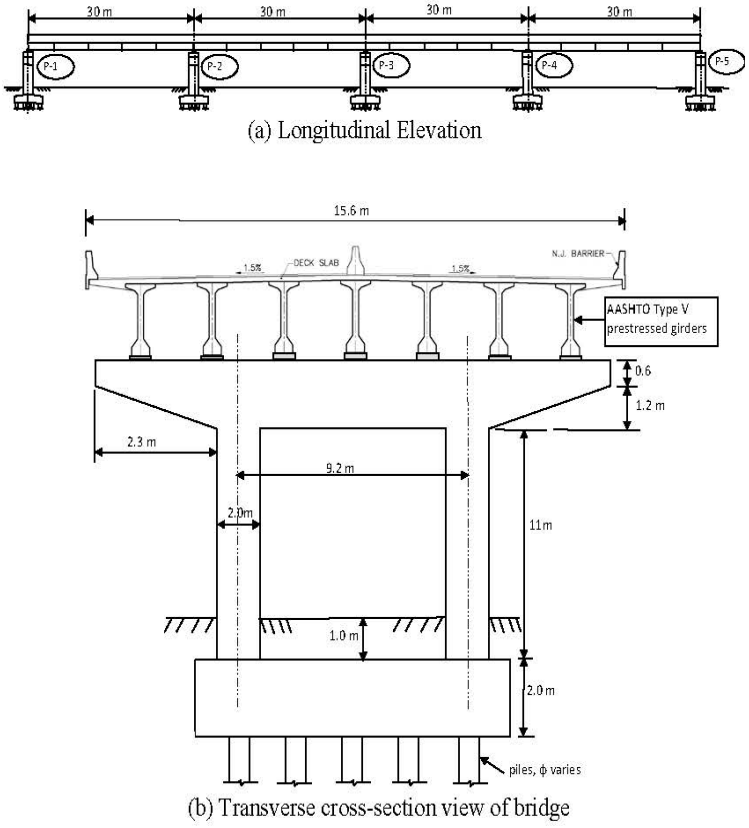


Fig. 1. Bridge layout and section

modeled by assigning the non-linear load-displacement curve as determined from moment-curvature analysis of the pier cross section.

The FEM model of the bridge was subjected to 15 recorded seismic ground motions varying in PGA intensity from 0.03g to 0.64g as listed in Table 3. Four types of analysis were conducted for each seismic ground motion and soil profile viz. (i) fixed base (i.e. no SSI) and elastic pier, (ii) fixed base and inelastic pier, (iii) SSI and elastic pier and (iv) SSI and inelastic pier. Analysis types (i) and (iv) represents the most simplified and most 'exact' models respectively. Altogether one hundred and eighty (180) FEM analyses were conducted for all cases of pier elasticity, soil-pile stiffness and ground motion records.

Table 1: Soil profiles and their mechanical properties

| AASHTO Site Class | Soil Profile | $V_s$ (m/s) | ρ ($kg/m^3$) | ν | G (MPa) | β (%) |
|---|---|---|---|---|---|---|
| C | $II_{upper}$ | 600 | 2060 | 0.35 | 741 | 3 |
| | $II_{avg}$ | 475 | 2020 | 0.35 | 456 | 4 |
| D | $III_{upper}$ | 350 | 1980 | 0.40 | 243 | 5 |
| | $III_{avg}$ | 275 | 1900 | 0.40 | 144 | 7 |
| | $III_{low}$ | 175 | 1850 | 0.42 | 57 | 8 |

Table 2: Pile group stiffness in various modes for the selected soil profiles

| Soil Profile | Pile length (m) | $K_v$ $x10^6$ (kN/m) | $K_{Hx}$ $x10^6$ (kN/m) | $K_{Hz}$ $x10^6$ (kN/m) | $K_{Rx}$ $x10^8$ (kN-m/rad) | $K_{Rz}$ $x10^8$ (kN-m/rad) |
|---|---|---|---|---|---|---|
| $II_{upper}$ | 22 | 29.15 | 11.23 | 10.97 | 13.28 | 8.22 |
| $II_{avg}$ | 25 | 19.54 | 7.64 | 7.40 | 8.94 | 5.55 |
| $III_{upper}$ | 30 | 11.78 | 4.78 | 4.54 | 5.43 | 3.39 |
| $III_{avg}$ | 32 | 7.31 | 3.16 | 3.01 | 3.93 | 2.14 |
| $III_{low}$ | 35 | 3.07 | 1.53 | 1.47 | 1.47 | 0.95 |

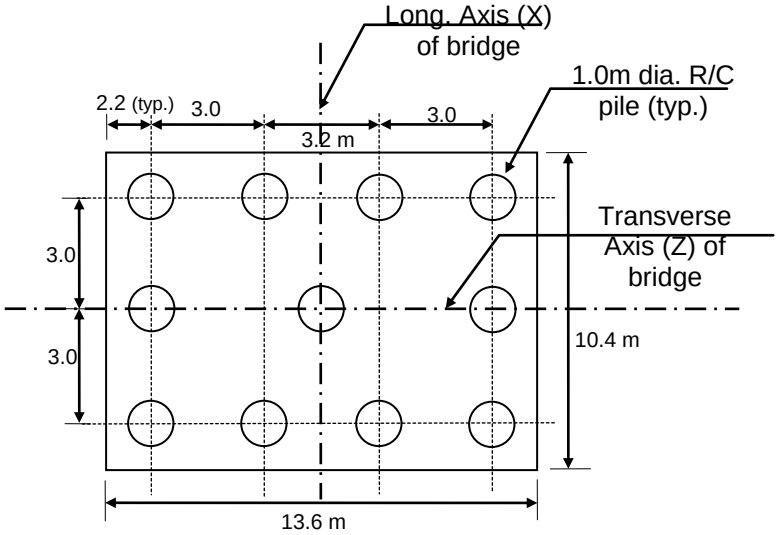


Fig. 2: Pile Group Layout (Plan view)

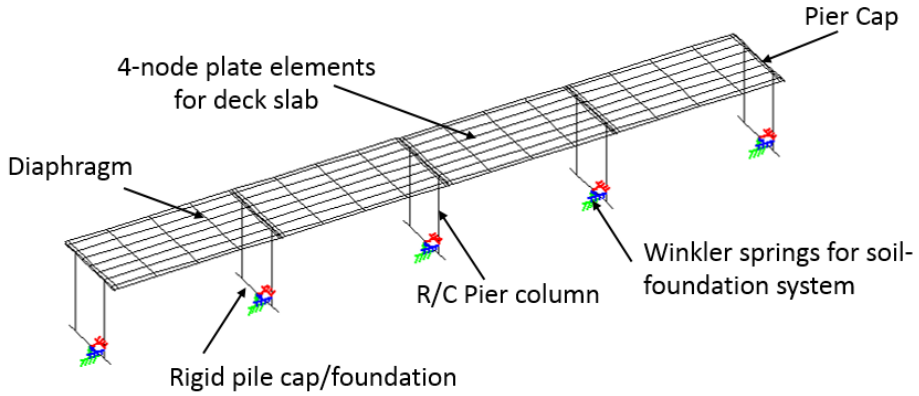


Fig. 3. 3D FEM model of the bridge

**Table 3: Ground motions used in the study**

| | EQ Record ID | Seismic event | Year | Station | Mag. | PGA (g) | Fault dist. (km) | $V_s$ (m/s) |
|---|---|---|---|---|---|---|---|---|
| Design Basis Earthquake | 1 | Edgecomb, NZ | 1987 | Maraenui Primary School | 6.6 | 0.036 | 69 | 425 |
| | 2 | Irpinia- Italy | 1980 | Calitri | 6.9 | 0.14 | 17 | 600 |
| | 3 | Chi-Chi-Taiwan | 1999 | CHY015 | 7.6 | 0.183 | 38.1 | 229 |
| | 4 | Spitak-Armenia | 1988 | Gukasian | 6.77 | 0.205 | 24 | 275 |
| | 5 | Kobe- Japan | 1995 | Shin Osaka | 6.9 | 0.21 | 19 | 256 |
| | 6 | Kocaeli, Turkey | 1999 | Ambarli | 7.51 | 0.23 | 69.6 | 175 |
| Functional Evaluation Earthquake | 7 | San Fernando | 1971 | Castaic - Old Ridge Route | 6.61 | 0.266 | 23 | 450 |
| | 8 | Landers | 1992 | Joshua Tree | 7.28 | 0.28 | 11 | 379 |
| | 9 | Dinar, Turkey | 1995 | Dinar | 6.4 | 0.30 | 3.4 | 220 |
| | 10 | Tabas, Iran | 1978 | Dayhook | 7.35 | 0.328 | 13.9 | 660 |
| | 11 | Imperial Valley | 1940 | Elcentro | 6.9 | 0.36 | 17 | 310 |
| | 12 | Loma Prieta | 1989 | Gilroy Array #2 | 6.93 | 0.40 | 11 | 271 |
| Max. Considered EQ | 13 | Northridge-01 | 1994 | Beverly Hills | 6.69 | 0.43 | 17 | 356 |
| | 14 | Duzce, Turkey | 1999 | Duzce | 7.14 | 0.52 | 6.6 | 276 |
| | 15 | Kobe, Japan | 1995 | Takatori | 6.9 | 0.64 | 1.5 | 256 |

## 3. RESULTS & DISCUSSION

As mentioned earlier that three response parameters were investigated in the study i.e. bridge deck acceleration, longitudinal displacement of deck and seismic shear force for 180 cases of FEM analysis. Due to space limitation, only results and discussion of seismic shear force are presented herein.

### 3.1 Variation of seismic shear force

3.1.1 Elastic pier column

Fig. 4 presents the variation of computed maximum seismic shear force in one column of the bridge pier for various boundary / soil conditions as a function of PGA. The computed column shear force showed an increasing relationship with PGA. However, the maximum variation of the column shear force for a particular seismic ground motion across various boundary / soil conditions was -20% and +40%. Negative values indicate a reduction in column shear force as compared to the fixed base case. Sudden upward and downwards jumps in computed column shear force values for EQ records 5 and 10 respectively, can be attributed to the characteristics of these earthquakes.

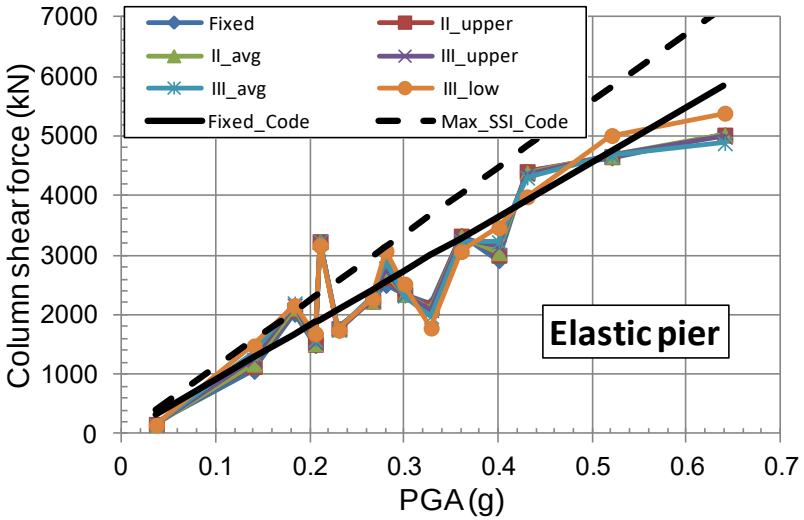


Fig. 4: Variation of seismic shear force as a function of PGA – Elastic pier column

Code based seismic shear force for the fixed base case (which will give the lower bound value) and for the SSI case with maximum column shear force (i.e. III_upper) are also plotted in these figures. It can be noted that the code based values of column shear provide a reasonable bound for the computed values of column shear from FEM analyses.

3.1.2 Inelastic pier column

Maximum seismic column shear force computed from FEM analyses for the bridge with inelastic pier columns is plotted in Fig. 5 for various cases of boundary / soil conditions for the considered seismic input motions.

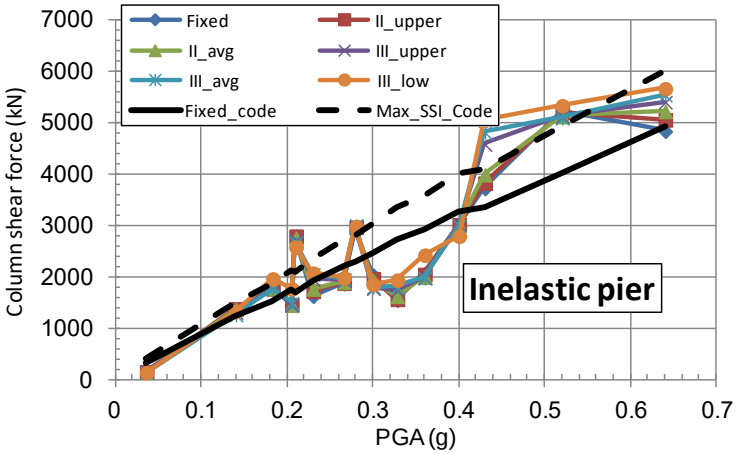


Fig. 5: Variation of seismic shear force as a function of PGA – Inelastic pier column

It can be noted that the column

shear force shows a linearly increasing trend between PGA of 0.03 and 0.3g. Then a dip is noted between 0.3g and 0.4g. Beyond 0.4g, a sudden increase in column shear force and then a flatter increase beyond 0.4g in seismic column shear force can be observed. The sharp increase in the column shear force beyond PGA of 0.4g can be attributed to the bridge pier column design which is designed for a seismic acceleration of 0.2g as well as the characteristics of the seismic ground motions which interacted favorably with the bridge dynamics to produce large seismic shear forces. Yet another factor is the fact that the column rebars has started to yield for seismic motions greater than 0.4g and the large displacements created larger seismic shear force in the pier columns. It is to be recalled that the bridge is designed for a PGA of 0.2g and yielding of rebars in the pier columns is expected for PGA greater than 0.4g.

Maximum scatter of seismic shear force in a column for a particular earthquake for various conditions of soil profile is -12% and 38%.

## 3.2 Effect of SSI on seismic column shear force

### 3.2.1 Elastic pier column

Fig. 6 presents the column seismic shear force ratio between the SSI cases and the fixed base case for bridge with elastic pier columns. A ratio of more than 1 is indicative of increase in column shear force due to inclusion of SSI. The column shear force ratio varies between 0.8 and 1.4 for the bridge with elastic pier columns which means that column shear force is increased as well as decreased for certain seismic ground motions by including SSI. Inclusion of SSI seems to be beneficial in 5 ground motions (i.e. ratio < 1.0) and detrimental in 10 (i.e. ratio > 1.0).

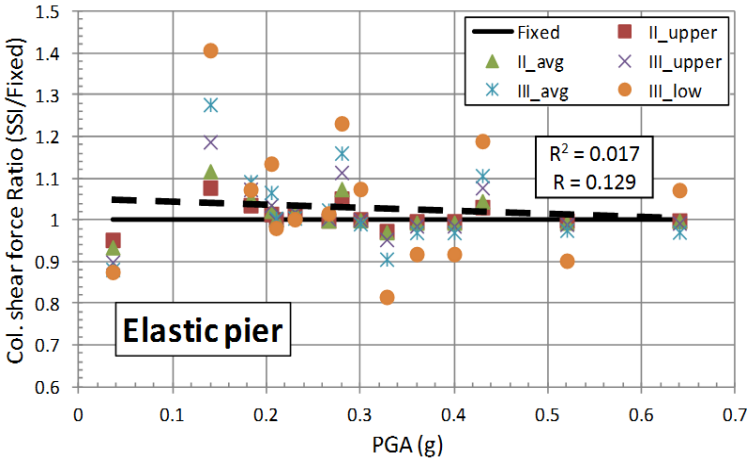


Fig. 6: Column shear force ratio between SSI and fixed base cases plotted against PGA – Elastic pier column

An almost equal scatter above and below the unit value can be observed and a trend of this ratio with respect to PGA is difficult to ascertain. This observation is supported by a *R* value of 0.13 for the linear regression line plotted for the data in Fig. 6. This low *R* value indicates that there is no correlation between the column shear force ratio and PGA (Devore & Farnum, 2005).

### 3.2.2 Inelastic pier column

Effect of SSI on seismic shear force in the pier column as compared to the fixed base case for the bridge with inelastic pier columns is determined through the ratio of column shear force for bridge model including SSI to that for the fixed base case (i.e.

without SSI). The results are plotted in Fig. 7. A value of more than one for this ratio indicates that the column shear force increases due to inclusion of SSI. It can be noted in Fig. 7 that the displacement ratio is more than unity for all but six earthquake records which implies that inclusion of SSI generally results in increased seismic shear force in the pier columns as compared to the fixed base case. The column shear force ratio varies between 0.86 and 1.38.

A linear regression line plotted for the data in Fig. 7 gives a $R^2$ value of 0.121 and a $R$ value of 0.348 which indicates a weak correlation between PGA and displacement ratio (Devore & Farnum, 2005). Recall that a linear regression resulted in no correlation between these parameters for the elastic pier column case.

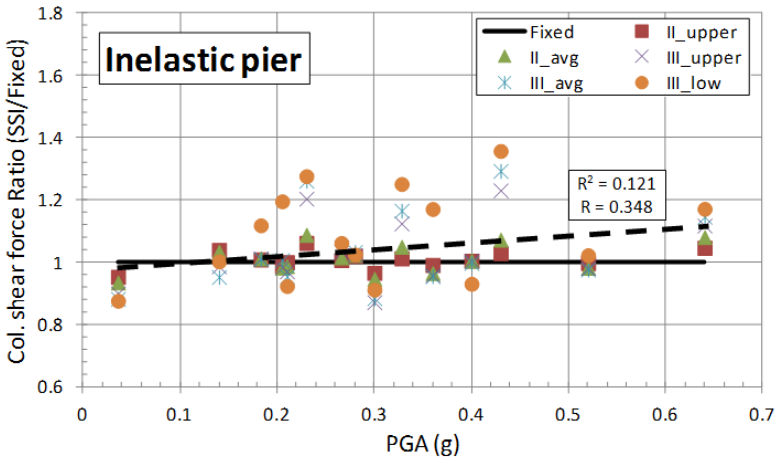


Fig. 7: Column shear force ratio between SSI and fixed base cases plotted against PGA – Inelastic pier column

### 3.3 Effect of pier column non-linearity on seismic shear force in pier columns

In order to delineate the impact of pier column non-linearity on seismic column shear force, the ratio of column shear force for inelastic and elastic pier column cases are plotted in Fig. 8 as a function of PGA for the considered cases of bridge boundary condition / soil conditions and seismic ground motions.

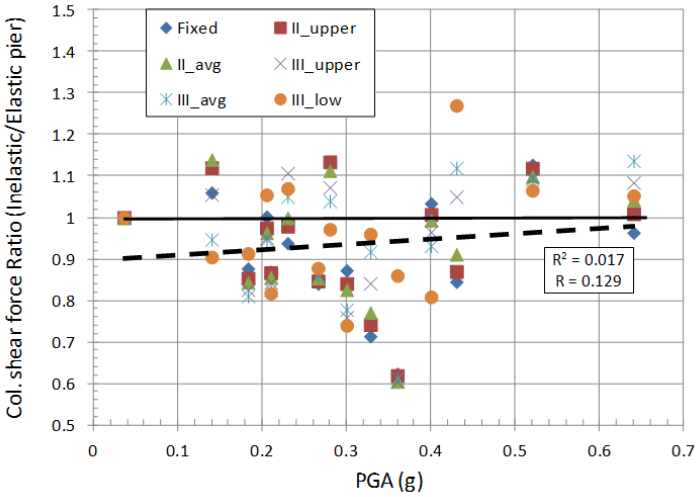


Fig. 8: Column shear force ratio for inelastic and elastic pier as a function of PGA

A value of the column shear ratio of more than 1 indicates that pier column inelasticity results in increased column shear force as compared to the bridge with elastic pier columns. The shear force ratio varies between 0.6 and 1.27 for all the cases. The shear force ratio is more than 1 for 30 data points, less than unity for 54 and equal to unity for 6 data points. This implies that inclusion of pier column non-linearity decreased seismic shear force in the columns for 60% of the data points and increased it in 33%, while it stayed the same for 7% of the data points. If the same statistics are computed for PGA up to 0.4g, then pier non-

linearity led to decrease in seismic shear force in 50 data points which is 70% of the total data points up to PGA of 0.4g. It can therefore, be concluded that inclusion of pier inelasticity generally results in decreased seismic shear demand on the pier columns for design level earthquakes.

A linear regression of the data yielded $R^2$ = 0.017 and $R$ = 0.129 as plotted in Fig. 8. This value of $R$ represents no correlation between PGA and the column shear force ratio between inelastic pier column cases and elastic pier column cases (Devore & Farnum, 2005).

## 4. CONCLUSIONS

SSI effects can be neglected for soils II_upper and II_avg while computing seismic shear force in bridge piers. On the other hand, pier column non-linearity cannot be ignored for any boundary conditions. SSI and pier column non-linearity mostly reduced the seismic shear forces as compared to the fixed base and elastic pier cases.

## ACKNOWLEDGEMENTS

This work was supported by Kuwait University, Research Grant No. EV01/16.

## REFERENCES

AASHTO (2010), “AASHTO LRFD Bridge Design Specifications”, Washington, DC: *American Association of State Highway and Transportation Officials*.

Chaudhary, M.T.A., Abe, M. and, Fujino, Y. (2001), “Identification of soil-structure interaction effect in base-isolated bridges from earthquake records”, *Soil Dynamics and Earthquake Engineering*, **21**(8), 713-725.

Ciampoli M. and Pinto, P. (1995), “Effects of soil-structure interaction on inelastic seismic response of bridge piers”, *J. of Structural Engineering*, **121**(5), 806-814.

De Carlo, G., Dolce, M. and Liberatore, D. (2000), “Influence of soil-structure interaction on the seismic response of bridge piers”, *Proceedings of the 12th World Conference on Earthquake Engineering*, Auckland, New Zealand, Paper No. 438.

Devore, J.L. and Farnum, N.R. (2005), “Applied Statistics for Engineers and Scientists”, 2nd ed. Toronto, *Cengage Learning*.

Dobry, R. and Gazetas, G. (1988), "Simple method for dynamic stiffness and damping of floating pile groups", *Geotechnique*, **38**(4), 557-574.

Fraino, M., Ventura, C.E., Liam Finn, W.D.and Taiebat, M. (2012), “Seismic soil-structure interaction effects in instrumented bridges”, *Proceedings of the 15th World Conference on Earthquake Engineering*, Lisbon, Portugal, Paper No. 5307.

Makris, N. and Gazetas, G. (1992), “Dynamic pile-soil-pile interaction. Part II: Lateral and seismic response”, *Earthquake Eng. and Structural Dynamics*, **21**(2), 145-162.

Mylonakis, G. and Gazetas, G. (2000), “Seismic soil-structure interaction: beneficial or detrimental?”, *Journal of Earthquake Engineering*, **4**(3), 277-301.

NEHRP (2003), “NEHRP recommended provisions for seismic regulations of new buildings and other structures”, *Building Seismic Safety Council*, Washington, D.C.